NO. 55 NOTES FROM THE SHOP $3.50

Woodsmith®

COUNTRY · PIE · SAFE

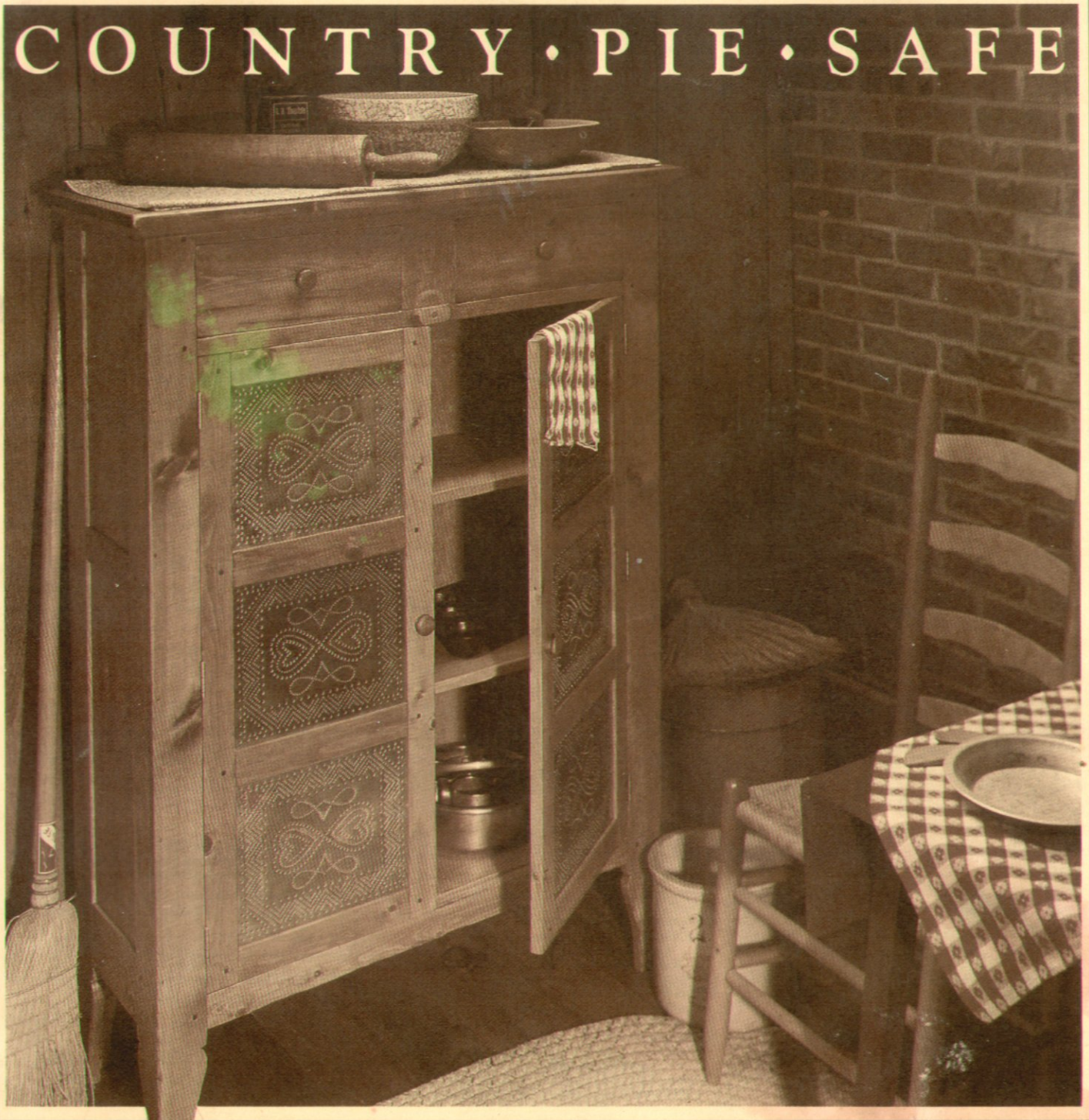

Woodsmith

Number 55 **February, 1988**

Editor	**Donald B. Peschke**
Design Director	**Ted Kralicek**
Managing Editor	**Douglas L. Hicks**
Assistant Editor	**Douglas M. Lidster**
Project Designer	**Ken Munkel**
Technical Illustrators	**David Kreyling** **Cary Christensen** **Rod Stoakes** **Chris Glowacki**
Customer Service	**Sandy Baum, Mgr.** **Vicky Robinson** **Jackie Stroud** **Pat Koob**
Computer Operations	**Ken Miner**
Administrative Assts.	**Cheryl Scott** **Jean Carey**
Building Maintenance	**Archie Krause**

The Woodsmith Store

Operations	**Steve Krohmer**
Marketing Manager	**Steve Dozier**
Administrative Asst.	**Christel Miner**
Store Managers:	
St. Louis, MO	**Jon Behrle**
San Francisco, CA	**Michael DeHaven**
Des Moines, IA	**Kent Welsh**

WOODSMITH (ISSN 0164-4114) is published bimonthly (February, April, June, August, October, December) by Woodsmith Publishing Co., 2200 Grand Ave., Des Moines, IA 50312.

Woodsmith is a registered trademark of Woodsmith Publishing Co.

©**Copyright 1988** by Woodsmith Publishing Co. All Rights Reserved.

Subscriptions: One year (6 issues) $12.95, Two Years (12 issues) $22.95. Canada and Foreign: add $2 per year, U.S. funds only. Single copy price, $3.50.

Second Class Postage Paid at Des Moines, Iowa.

Postmaster: Send change of address notice, to Woodsmith Publishing Co., 2200 Grand Ave., Des Moines, IA 50312.

BACK ISSUES: All back issues of *Woodsmith* are still available. For a free booklet describing the contents and prices of all back issues, just send us your name and address to the address above.

SAMPLE COPY: We will be happy to send a free sample copy of *Woodsmith* to anyone you think would enjoy it. Just send us his/her name and address.

Sawdust

ABOUT THIS ISSUE. When we design a project, most of the planning is done on the drafting board. The overall look of the project is determined, and all of the dimensions are worked out.

That's the ideal anyway. As we get into the shop, things change. In most cases, these changes are minor and don't affect the final look of the project too much.

The pie safe shown in this issue was an entirely different matter. Every step along the way produced major visual changes. The idea was to build a project that looked old when it was done.

That was difficult. I had to think in such different terms. For example, the joints on a 100-year-old cabinet wouldn't be perfect. So, instead of striving for perfection, I had to think about how the joints might look after a 100 years of wear and tear. The challenge was to give them the *appearance* of being old and loose, yet actually build them strong and tight.

I usually try to avoid nicks and scratches while building a project. But on the pie safe, all these shop dings became part of the final look.

Even at the end, the object was to develop a finish that looked old and worn—an imitation of the patina that would develop naturally with years of wear.

So what started out as a project that I thought would be easy to build (heck, it's just a simple pine cabinet), became quite a thoughtful challenge.

NEW FACES. Jean Carey has joined our staff to work on the next edition of the *Woodsmith Sourcebook*.

For new subscribers who aren't familiar with the *Sourcebook*, it's a catalog of woodworking information that we published in 1984, 1985 and 1986. (We gave it a rest last year.)

Since *Woodsmith* does not carry advertising, we developed the *Sourcebook* as a way for subscribers to send for new catalogs and product information.

Jean has started contacting catalog companies, tool manufacturers, and a variety of other companies who produce products for woodworkers. And she's looking at ways to expand the *Sourcebook* to provide even more information.

The next edition of the *Woodsmith Sourcebook* will be mailed in the Fall of 1988. It will be sent to all active subscribers, free of charge.

PUBLISHER'S STATEMENT. Once a year we are required by the Post Office to publish the Publisher's Statement below.

What it shows is that our circulation has been hovering around 250,000 to 275,000 for the past year. Those are nice numbers, but what the statement doesn't show is the enjoyment we gain from publishing *Woodsmith*. Every issue offers a challenge and all of us enjoy working on every one.

INDEX. We have also included an index in this issue. It covers all the articles and projects shown in the first 54 issues of *Woodsmith* published.

As in the past, the index is divided into two parts. The first section lists general information and techniques, while the second section lists all the projects.

NEXT MAILING. The next issue of *Woodsmith* (No. 56) will be mailed during the week of May 23, 1988.

STATEMENT OF OWNERSHIP, MANAGEMENT AND CIRCULATION

(Required by 39 U.S.C. 3685)

1. Title of Publication: Woodsmith. 1a. Publication No.: 0164-4114. 2. Date of Filing: October 1, 1987. 3. Frequency of issue: Bimonthly. 3a. No. of issues annually: six (6). 3b. Annual subscription price: $10.00. 4. Complete mailing address of known office of publication: 2200 Grand Avenue, Des Moines, (Polk County), Iowa 50312. 5. Complete mailing address of the headquarters of general business offices of the publisher: 2200 Grand Avenue, Des Moines, Iowa 50312. 6. Complete address of publisher, editor, and managing editor: Publisher: Donald B. Peschke, 2200 Grand Avenue, Des Moines, Iowa 50312, Editor: (same as publisher), Managing Editor (none). 7. Owner: Woodsmith Publishing Co., 2200 Grand Avenue, Des Moines, Iowa 50312; D.B. Peschke Investment Corporation, 2200 Grand Avenue, Des Moines, Iowa 50312. 8. Known bondholders, mortgagees, and other security holders owning 1 percent or more of total amount of bonds, mortgages or other securities: None. 9. (Does not apply) 10. Extent and nature of circulation:

	Average no. copies each issue during preceeding 12 months	Actual no. copies of single issue published nearest to filing date (Sept. 1987)
A. Total no. copies printed (net press run)	303,339	278,603
B. Paid and/or requested circulation		
1. Sales through dealers and carriers, street vendors and counter sales	4,646	4,705
2. Mail subscriptions (paid or requested)	280,866	263,455
C. Total paid and/or requested circulation	285,512	268,160
D. Free distribution by mail, carrier or other means, samples, complimentary, and other free copies	95	97
E. Total distribution	285,607	268,257
F. Copies not distributed		
1. Office use, left over, unaccounted, spoiled after printing	17,526	10,115
2. Returns from news agents	206	231
G. Total	303,339	278,603

11. I certify that the statements made by me above are correct and complete. (signed) Donald B. Peschke, Publisher/Editor

Tips & Techniques

CALIPER STICK

It used to be that whenever I turned a spindle on the lathe, I spent half my time setting and resetting the adjustable calipers to check different diameters. Then I made a simple caliper stick and found the whole process of turning and checking specific dimensions a lot easier.

The caliper stick is simply a piece of ⅛"-thick Masonite (hardboard) or plastic that has a series of half circles along one edge. Each of the arcs measures a different diameter.

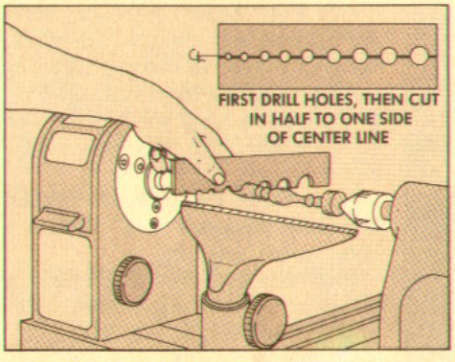

To make a caliper stick, start by cutting the Masonite or plastic about two inches wider than the largest diameter needed. Then draw a centerline down the length of the stick.

Next, drill out holes along the centerline to the same size as the desired diameters on the spindle you're turning. (You can make a long "universal" stick for most any turning by starting at one end with a small hole and increasing each hole incrementally — ⅛" for example.)

Once all the holes are drilled, rip the stick in half. Note: Don't align the center of the blade on the centerline. Instead, rip with one edge of the blade (kerf) on the line. This will give a set of arcs with full diameters at the edge of the stick.

Arthur W. Keely
Vestal, New York

AUXILIARY ROUTER TABLE FENCE

To make my router table more versatile, I've added a two-part auxiliary fence to the front of the regular fence. It has a number of purposes. First, I can vary the size of the center opening according to the size of the router bit. It's safer and easier to use a fence with an opening that's just slightly larger than the bit.

The opening can also be closed completely for a smooth surface to run against when routing dadoes or grooves in the center of a board.

I also use the two-part auxiliary fence like a shaper — with an infeed and outfeed fence that allows taking a full cut off the face of the workpiece.

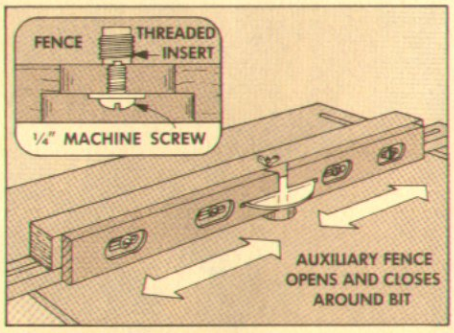

To make the auxiliary fence, cut a piece of ¾" stock to the same height and length as the router table fence. Then cut four ¼" by 1½" through slots to accept ¼" round-head machine screws. To make room for the screw head and washer, rout a ⅝" by 2" mortise ¼"-deep over the smaller slot.

Next, cut the fence in half and then miter the center ends at 45° to serve as chip-breakers. Also slightly chamfer the leading edge of the outfeed fence so the workpiece doesn't "hang up" on the point.

After the auxiliary fence was complete, I screwed it into threaded inserts in the main fence. (Threaded inserts in the main fence also let you attach other accessory fences such as the jig for stopped cuts in *Woodsmith*, No. 39.)

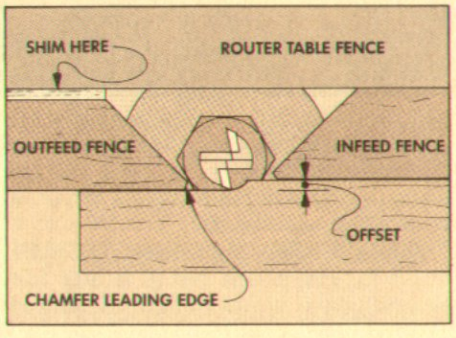

This auxiliary fence permits the outfeed fence to be offset from the infeed fence (like a shaper) by shimming between the main fence and the outfeed fence. Playing cards, thin cardboard, or washers all make good shims. The offset provides support for the routed workpiece beyond the bit when routing a full face cut.

Yosh Sugiyama
Redding, California

Editor's Note: Yosh also cut a slot in his auxiliary fences to make room for the clear plastic guard he has on his router table, see Woodsmith No. 54.

SIMPLE STRETCHER-TO-LEG JOINT

For years I've been using an easy but strong method to join stretchers to legs for tool stands and benches made from 2x4's. The parts are simply held together with a long bolt, nut, and half-circle plug.

To make this joint, first drill a 1½"-diameter hole through the side of the stretcher with a hole saw and then save the plug.

Next, turn the plug 90° so the grain in the plug runs perpendicular to the grain in the stretcher and put it back into the hole. Then drill a bolt hole in from the end of the stretcher. Now remove the plug and cut it in half along the grain.

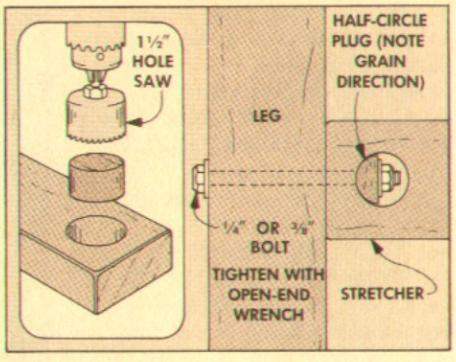

After drilling a matching hole through the leg, I put glue on the plug to help keep it in place and put it back in the hole.

To assemble the pieces, hold the leg and stretcher together and slide the bolt through the holes and a washer and nut on the end. An open-end wrench in the half-hole holds the nut while tightening.

Orienting the grain in the plug perpendicular to the grain in the stretcher helps keep the plug from splitting when the nut and bolt are tightened.

Note: Since there's some sawdust lost to the kerf of the hole saw, the plug isn't a perfect half circle of the hole. But there's more than enough bearing surface on the plug to pull the leg and stretcher tight.

Frank Coates
San Jose, California

SEND IN YOUR IDEAS

If you'd like to share a woodworking tip with other readers of *Woodsmith*, send your idea to: *Woodsmith*, Tips & Techniques, 2200 Grand Ave., Des Moines, Iowa 50312.

We pay a minimum of $10 for tips, and $15 or more for special techniques (that are accepted for publication). Please give a complete explanation of your idea. If a sketch is needed, send it along; we'll draw a new one.

Letter Box

MAIL MANAGER

I'm what you might call a sequential mail opener. I tend to open all the woodworking catalogs that come in the day's mail first. Next, I read cards and letters. Later — sometimes much later — I open the bills.

To keep the mail organized I decided to invest part of a weekend to make an old-fashioned wall-hung letter box from some scraps of pine.

BASIC BOX CONSTRUCTION

The letter box derives much of its charm from its very basic joinery. Except for a few tongue and dado joints used inside to align the vertical parts, the rest of the joints are simple butt joints.

PATTERN TEMPLATES. The first step is to make cardboard templates for the profiles used on the front, middle, back, and sides.

Only two templates are needed for all the profiles on the letter box, see Fig. 1. The pattern that's used for the front (A), middle (B) and back pieces (C) is a series of connecting arcs. When it's traced pointing down (see Detail in Fig. 1), it forms the scoop in the front and middle pieces. When it's flipped upright, it forms the outline on the highest part of the back.

SIDE PATTERN. The pattern used for the side pieces (D) is a combination of curves and straight edges. To make this template, first lay out the straight lines. Then strike the arcs for the curves with a compass.

CUTTING THE PIECES

After the templates were made, I resawed enough ¾" pine to make all the ⅜"-thick pieces, see Cutting Diagram, page 7.

MARK CENTERLINE. To resaw the ¾" pine, start by marking the center of the width of the workpiece on one end, see Fig. 2. Then set the fence ⅜" from the saw blade to establish the thickness of the resawn stock, see Fig. 2.

SAFE SUPPORT. Depending on the width (height) of the board, it may take several passes on each edge. (Make each cut about ¾" deep.)

However, the last passes should be about 1/16" below the line marked at the center of the board, which will leave a section at the center connected. This keeps both halves together throughout the resawing operation, and lets the two edges of the workpiece provide support on both sides of the blade so there's no tendency for the workpiece to tip as the final cut is being made.

CUT WEB. After the resaw kerfs are cut into both edges of the stock, the web holding the halves together can be cut with a hand saw, see Fig. 2. Then use a hand plane to smooth off the ridge down the center of the resawn piece.

Shop Note: For another method to reduce the stock to ⅜" thick, see Shop Notes, page 22.

CUT TO SIZE. After the ridge is planed away, cut the five workpieces to width and length, see Fig. 3.

TRACE PATTERNS. Now the patterns can be traced from the templates onto each piece. Then cut away the waste to form the profiles.

Shop Note: When cutting out the profile on the front (A) and middle (B) parts, it's easier to make the center arc by boring with a 1¼"-dia. spade bit. Then use a band saw or coping saw to finish the profile.

HANGER HOLE. After all the profiles were cut, I bored a ¼" hanger hole centered near the top of the back, see Fig. 4. As a finishing touch, I chamfered both ends of the hole with a countersink, see Detail in Fig. 4.

DADOES

After cutting the profiles on the ends of the pieces, the next step is to cut dadoes

FIGURE 1

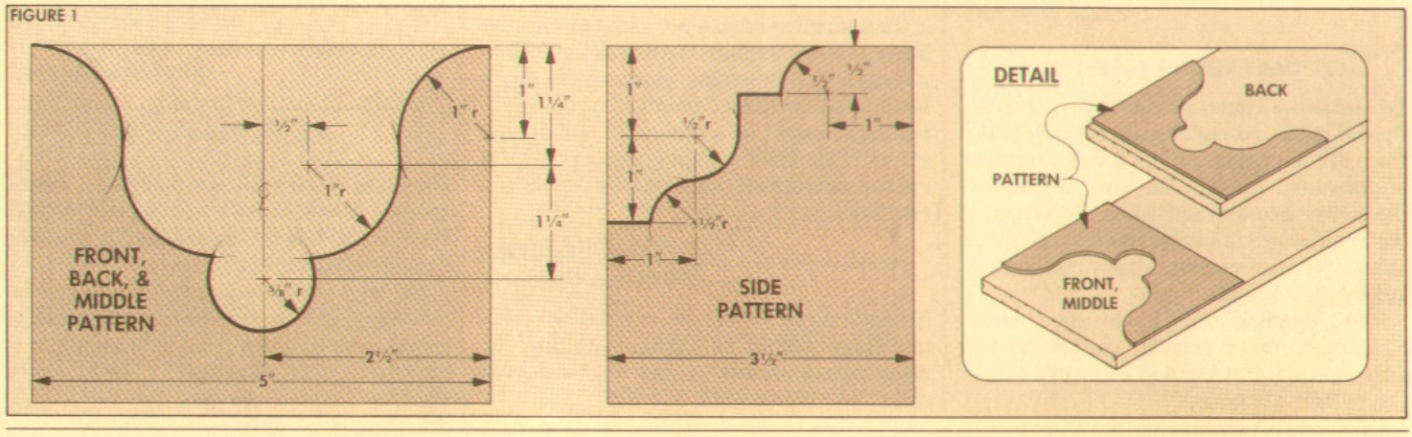

across the insides of the pieces to hold the tiers (shelves). The tiers act as both alignment spacers and drawer guides, refer to Fig. 7. I made these dadoes ⅛″ wide by ⅛″ deep using a combination blade on the table saw.

BOTTOM DADO. The first dado is made across the bottom of the front (A), back (C), and both sides (D) to hold the letter box bottom tier (E). To position this dado, begin by setting the blade height to ⅛″. Next, lock the fence as a stop so there's ¼″ between the inside of the blade and the fence, see Detail in Fig. 5. Then, use the miter gauge for support while cutting this dado across the bottom of all three pieces.

MIDDLE DIVIDER DADO. The next dado is made across the middle divider (B). This dado will align with the top dado on the back (refer to Fig. 7) and is used to mount the top tier. This dado is 1⅜″ up from the bottom of the middle divider (B).

DADOES ON BACK. There're two dadoes on the back (C). The first one is 2¼″ from the bottom, and the second is 3¾″ from the bottom, see Fig. 3.

TIERS

After the vertical parts of the letter box were done, I cut the three ⅜″-thick tiers that tie the letter box parts together, see Fig. 6.

The bottom tier (E) forms the bottom of the letter box and the drawer compartment. The middle tier (F) is the top of the drawer compartment and serves as a base support for the middle divider (B). And the upper tier (G) is sort of a stair step that keeps mail from dropping too deep into the rear letter compartment, refer to Fig. 7.

TONGUES. To lock these tiers into the vertical pieces, tongues are made to fit into the dadoes. To make these tongues, I cut rabbets on the edges of the workpieces.

RABBETS. The rabbets that form the tongues can be cut in a single pass on the table saw. But, because the width of the rabbet (which is the length of the tongue) is the same width as the saw blade teeth (⅛″), the fence has to be protected. To do this, first fasten an auxiliary fence (made from a strip of plywood) to the table saw's rip fence, see Detail in Fig. 6.

With the auxiliary fence in place, adjust the fence until the edges of the teeth are just skimming the surface. Then use the miter gauge to guide the ends of the workpieces over the blade to form the tongues.

Shop Note: Test the depth of cut first on a piece of scrap stock of the same thickness. Keep adjusting the blade height until the tongues fit the dadoes.

The upper tier (G) and middle tier (F) have tongues along the front and back edges, see Fig. 6. The bottom tier (E) has tongues on three edges to fit into the two sides and the back.

FIGURE 2

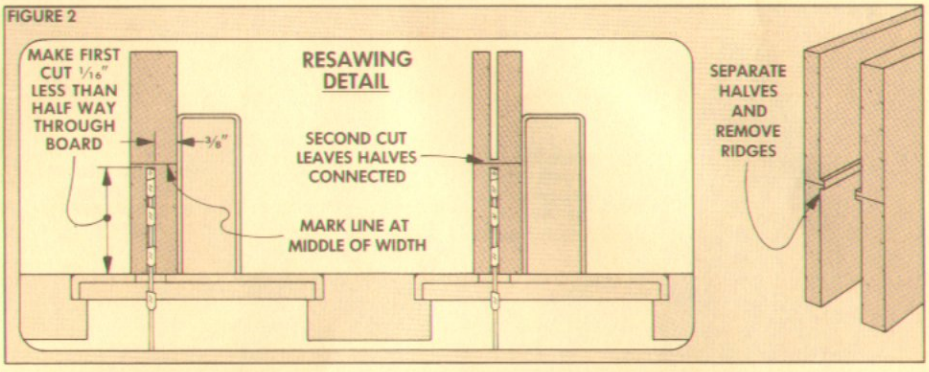

FIGURE 3

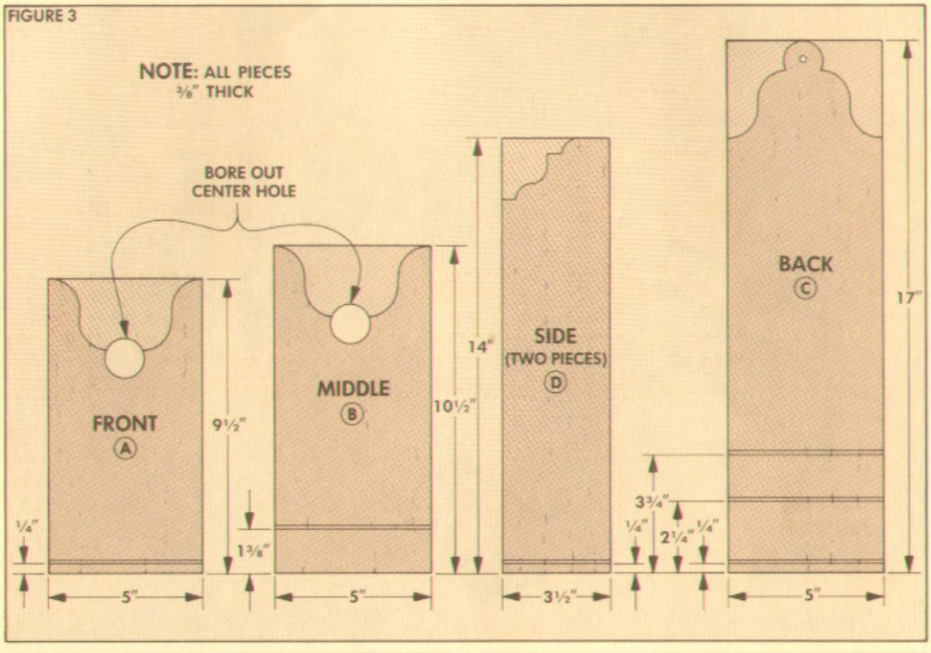

FIGURE 4

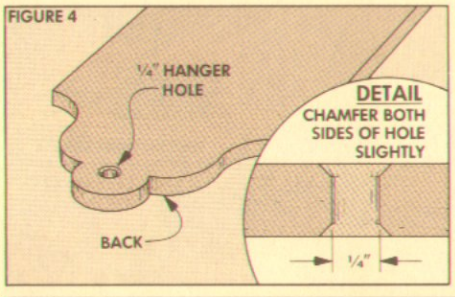

FIGURE 5

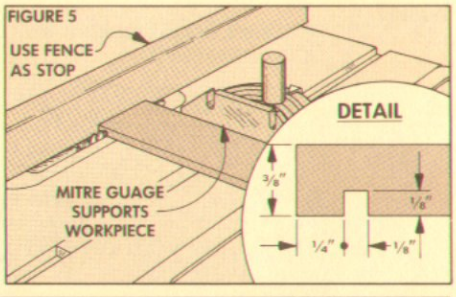

FIGURE 6

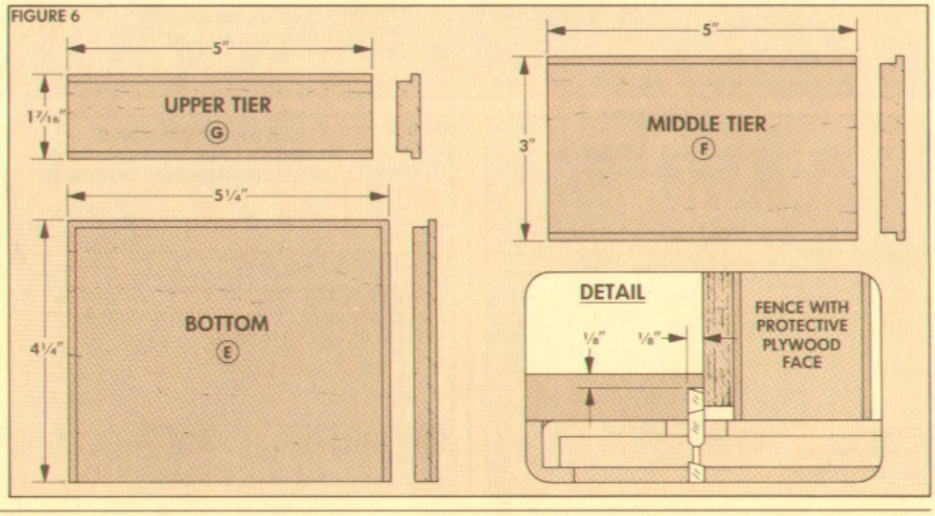

FIGURE 7

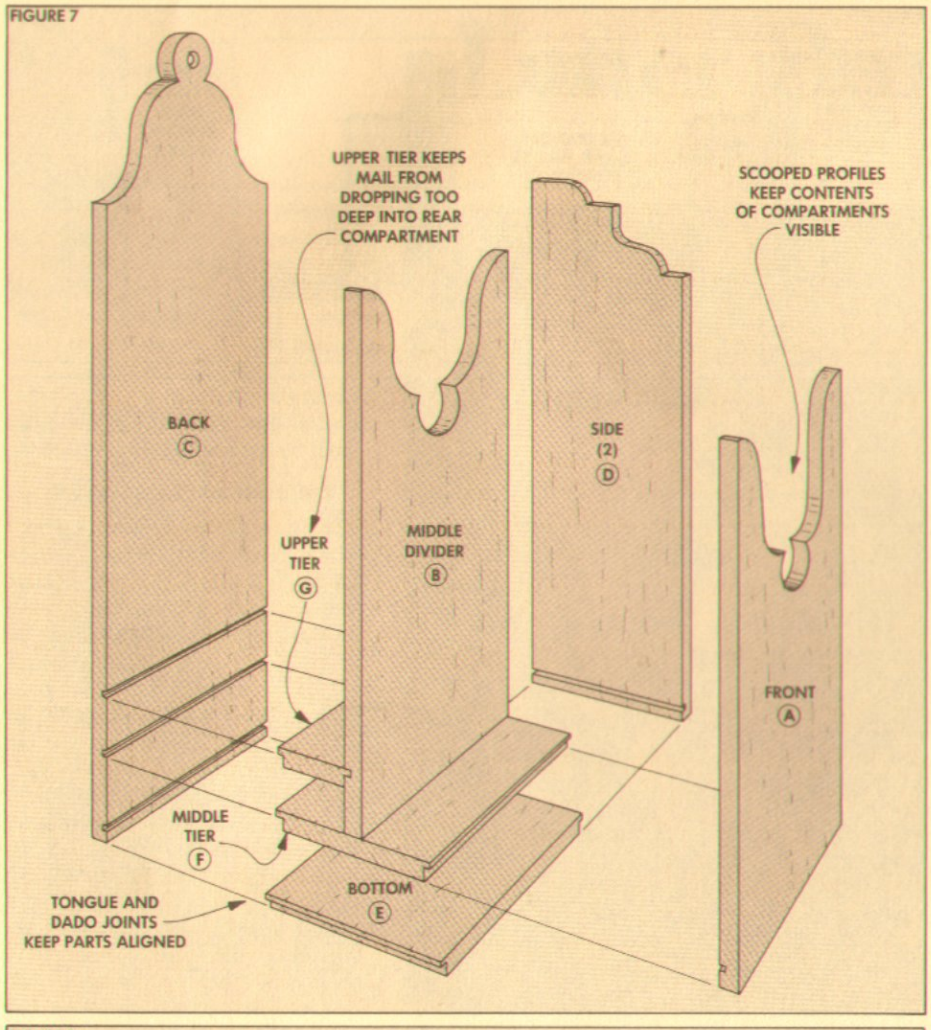

FIGURE 8

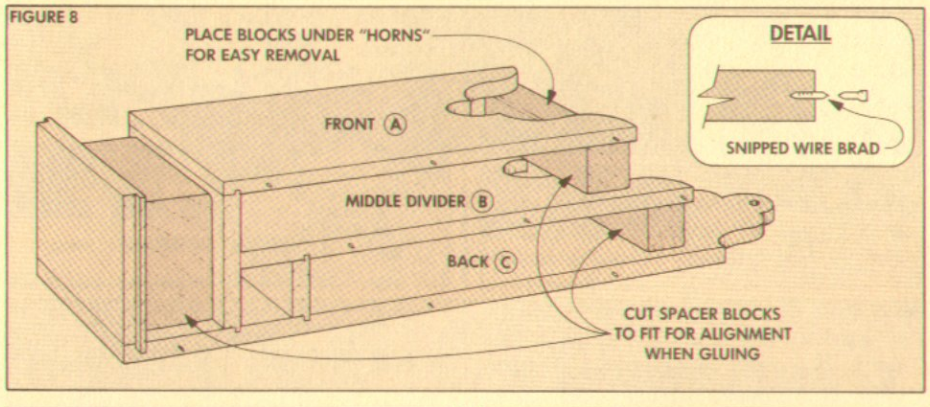

FIGURE 9

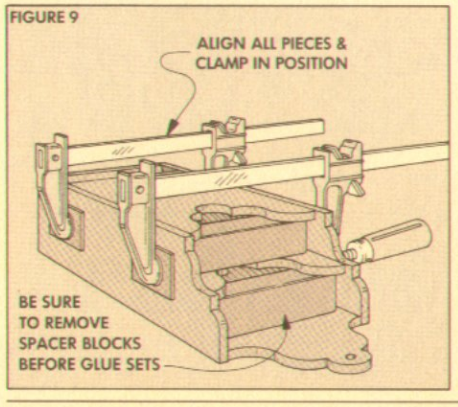

FIGURE 10

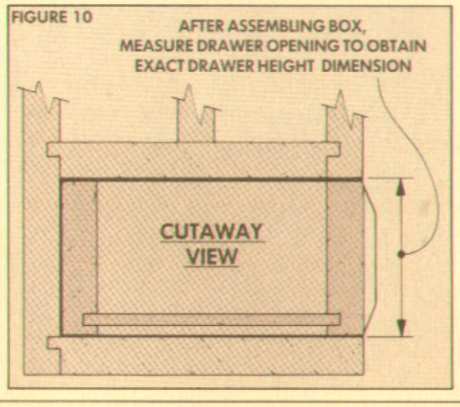

ALIGNMENT BLOCKS

After all the parts are cut to size and the dadoes are cut, the letter box can be assembled. However, the butt joints make aligning the parts tricky. To help, I cut up some scraps to be used as alignment blocks.

DRAWER OPENING BLOCK. First, make a block for the drawer opening to align the bottom tier (E) and middle (F) tier so the height of the drawer opening is the same at the front and back, see Fig. 8.

To make this block, resaw a scrap to the same thickness as the distance between the bottom and middle tiers. Then cut it 4" long to provide a ½" finger space on both ends so you can pull it out before the glue sets.

DIVIDER BLOCKS. The other two blocks keep the front, middle divider, and back aligned parallel during gluing. To make the front block, rip it to a thickness that exactly matches the distance between the front and middle divider, see Fig. 8.

Next, rip the rear block to a thickness of the distance between the middle divider and the back.

PINS. After making the blocks, there's one last step to help keep the pieces aligned while setting up the clamps. I put pins on the edges of the front, middle, and back to bite into the sides.

To make these pins, drive wire brads about ¼" deep centered on the edges. Then snip off the heads to leave ⅛"-long pointed pins, see Detail in Fig. 8.

ASSEMBLY SEQUENCE

Assembling a small project with exposed butt joints gets tricky. For gluing the parts together, I used white glue because it takes a little longer to set up than yellow glue (aliphatic), so it allows more time to get the pieces into position.

BEGIN ASSEMBLY. To glue the parts together, begin by placing the back (C) on a flat surface with the dadoes facing up. Next, apply glue to the edges of *all* the pieces. Then press the tiers into the dadoes and slip the spacer block between the bottom and middle tiers, see Fig. 8.

ADD DIVIDER. Next, add the middle divider (B). Place the spacer block on the back so the top edge is aligned with the "horns" of the middle divider. (This is so you can use your finger to pull out the block.) Then press the divider in place.

ADD FRONT. The front (A) is positioned just like the middle divider. First place the spacer block on the divider lined up with the "horns" of the front. Then press the dado over the tongue on the middle tier.

ADD SIDES. The fastest way to glue the sides is to put them both in place at the same time. To do this, position the dadoes (at the bottom of the sides) on the tongues of the bottom tier. Then swing the sides against the edges so the brad pins can temporarily grip the sides.

CLAMPING. While the pins are holding the box together, add clamps so pressure is applied on the center of the sides. Then tighten the clamps and remove the spacer blocks before the glue starts to set.

DRAWER

A drawer is made to fit the bottom opening. The first step is to resaw stock ½" thick for the drawer front (H), and ⅜" thick for the sides (I) and back (J). Then rip all pieces to 1/16" less than the height of the drawer opening, see Fig. 10.

THE FRONT. The next step is to cut the front (H) to length to fit between the sides of the box.

CHAMFER FRONT. To dress up the front, I chamfered the edges to "raise" the center. Set the blade at a 15° angle. Then position the fence ⅜" from the blade *at the table level*, see Detail in Fig. 12.

Shop Note: To make this chamfer cut safely, I notched a piece of ¾" scrap to use as a pushing jig, see Fig. 12.

After the chamfers are cut, cut rabbets at the ends of the drawer front to join it to the sides, see Detail A in Fig. 11.

DRAWER SIDES. Now the drawer sides (I) can be cut to length to position the chamfered edges of the drawer front flush with the front of the box, see Fig. 10. To do this, subtract the thickness of the shoulder on the drawer front from the depth of the box, see Detail A in Fig. 11.

Next, cut rabbets on the rear ends of the drawer sides, see Detail B in Fig. 11. Then cut the drawer back (J) to fit between the rabbets.

BOTTOM GROOVE. Finally, plough a ⅛" by ⅛" groove for the Masonite bottom (K) ⅛" from the bottom edge of all four pieces, see Detail C in Fig. 11.

KNOB

Before the drawer parts can be assembled, a tenoned knob is installed on the front, (see Sources, page 24). To lock it in place, I used a wedged joint, see Fig. 13.

SLOT. To make this joint, first cut a slot almost the length of the round tenon, see Step 1 in Fig. 13.

WEDGE. The wedge that goes into the slot is whittled from a ¼"-wide scrap. The measurements aren't critical — just make sure the thickest part is just a little thicker than the slot, see Step 2.

LOCK THE JOINT. To lock the joint, press the tenon through the hole in the drawer front until the base of the knob is flush with the front. Next, put a dab of glue in the slot and drive in the wedge. Then cut the tenon flush, see Step 3.

FINAL ASSEMBLY. To complete the assembly of the drawer, first cut a bottom (K) from ⅛" Masonite. Then glue all the parts of the drawer together.

FINISH. I used the same custom finish I developed for the pie safe, see page 20.

FIGURE 11

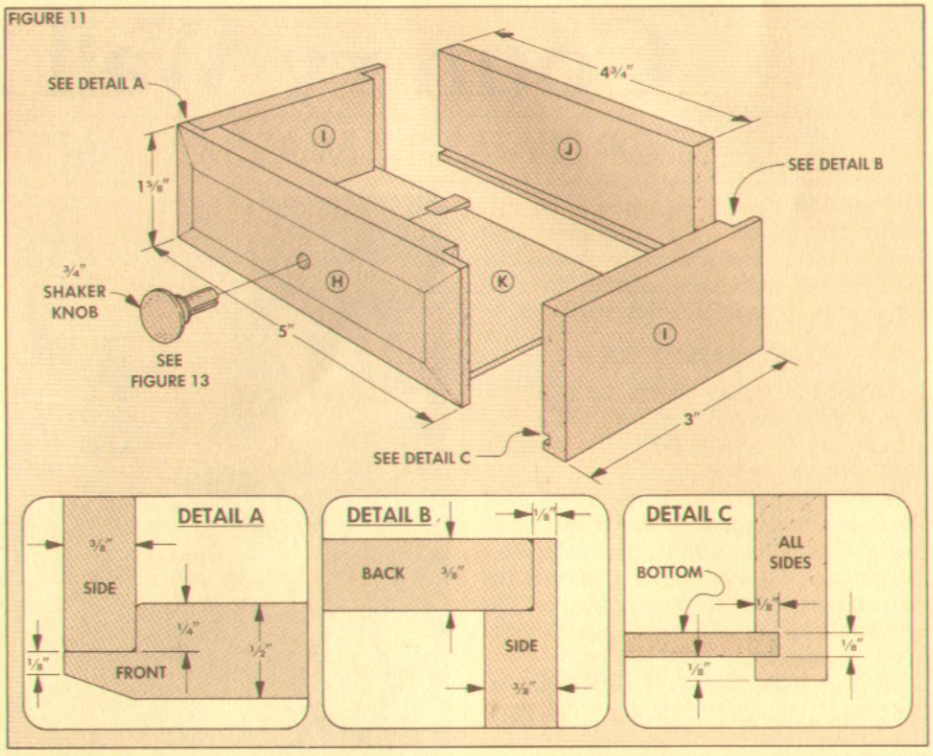

FIGURE 12

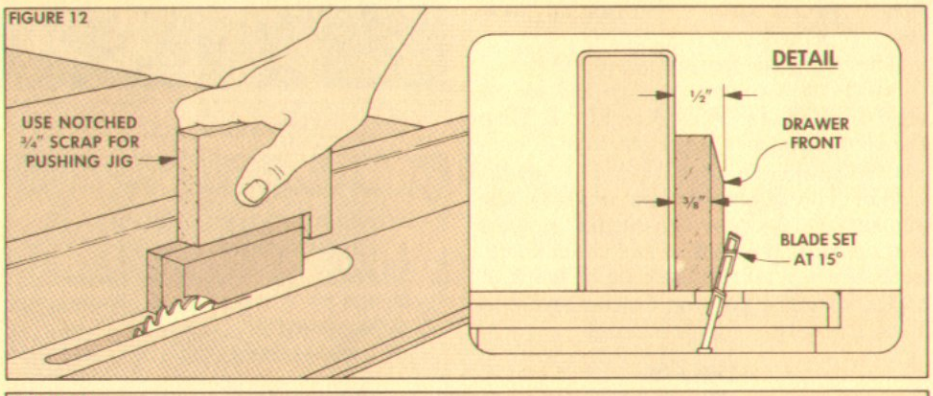

FIGURE 13

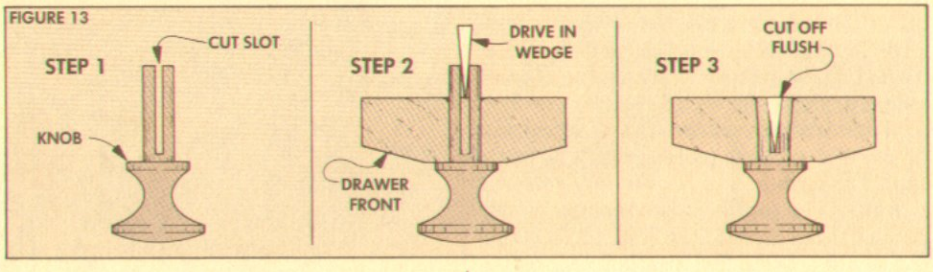

MATERIALS LIST

Overall Dimensions: 5½"w x 4¼"d x 17"h

A	FRONT	⅜ x 5—9½
B	MIDDLE DIVIDER	⅜ x 5—10½
C	BACK	⅜ x 5—17
D	SIDES (2)	⅜ x 3½—14
E	BOTTOM	⅜ x 4¼—5¼
F	MIDDLE TIER (SHELF)	⅜ x 3—5
G	UPPER TIER (SHELF)	⅜ x 1 7/16—5
H	DRAWER FRONT	½ x 1⅝—5
I	DRAWER SIDES (2)	⅜ x 1⅝—3
J	DRAWER BACK	⅜ x 1⅝—4¾
K	DRAWER BOTTOM	⅛ x 2⅝—4½

CUTTING DIAGRAM

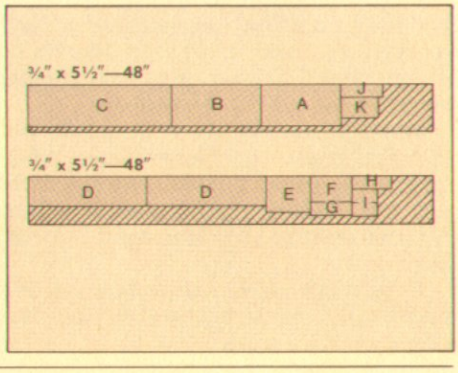

Country Wall Shelf

FOR PLATES 'N' MUGS OR HATS 'N' GLOVES

This country shelf is designed to be versatile. It can be used to display your favorite plates and mugs. Or, it could be used for hats and gloves. Either way, it's a nice project for a Saturday afternoon.

CUT PARTS TO SIZE

I started by cutting all the parts to size from a #2 common pine 1x10 (¾" x 9¼" actual) and two 1x8's (¾" x 7¼" actual), see Cutting Diagram.

GRAIN DIRECTION. It's important that the grain direction runs the *length* of all pieces. This is natural on the long pieces for the back (C) and top (D). But since the end supports (A) and center support (B) are almost square, it's easy to get the grain in the wrong direction.

RIP TO WIDTH. To avoid confusion, cut the top (D) out of the 1x10 first, and rip it to a finished width of 8". Before cutting the three supports out of the remaining piece, rip it to a width of 6½".

After the piece for the supports is ripped to width, the two end supports (A) are cut off 6⅞" long, see Detail A in Fig. 1. Then the center support (B) is cut to 5½" long, see Detail B.

Note: The difference in the lengths of the supports is because the center support butts against the back, while the end supports overlap the ends of the back by ¾" to allow for the hanging bracket, refer to Figs. 2 and 18.

TEMPLATE

After the supports are cut to size, a template is made to lay out the curved profile. To do this, begin by cutting a piece of posterboard 6⅞" wide by 6½" high, see Fig. 1. (Note that the pattern is the actual size of the end support pieces, which is wider than it is high.)

ARCS. The profile is determined by the arcs of three circles, see Fig. 1. To strike these arcs, begin by locating the center point of each and making part of a circle with a compass. Next, connect the upper and middle arcs with a straight line. Then measure ¼" straight out from the radius of the small, bottom arc to create the shoulder and cut out the pattern.

TRACE TEMPLATE. Now the profile can be transferred to the support pieces. When tracing the pattern, make sure the front and top edges of the template are flush with the front and top edges of the pieces, see Fig. 1.

Note: Don't cut out the profiles yet. It's easier to fit the parts together while the edges are still square.

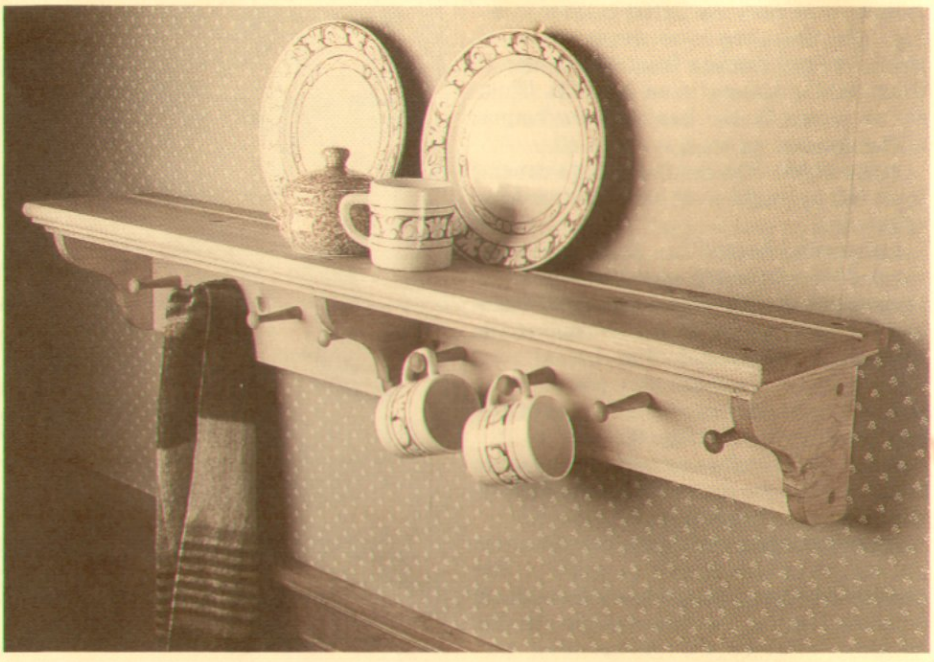

MATERIALS LIST

Overall Dimensions: 42¾"w x 8"d x 7¼"h

A	END SUPPORTS (2)	¾ x 6½—6⅞
B	CENTER SUPPORT	¾ x 6½—5½
C	BACK	¾ x 6½—41
D	TOP	¾ x 8—44½
E	MOLDINGS (2)	¾ x ¾—44
F	HANGING BRACKET	¾ x 3—41

CUTTING DIAGRAM

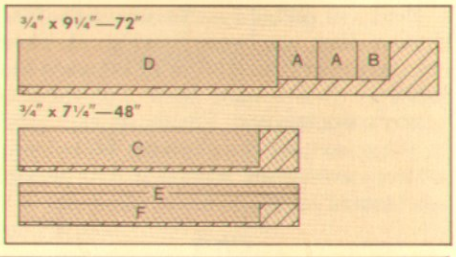

FIGURE 1

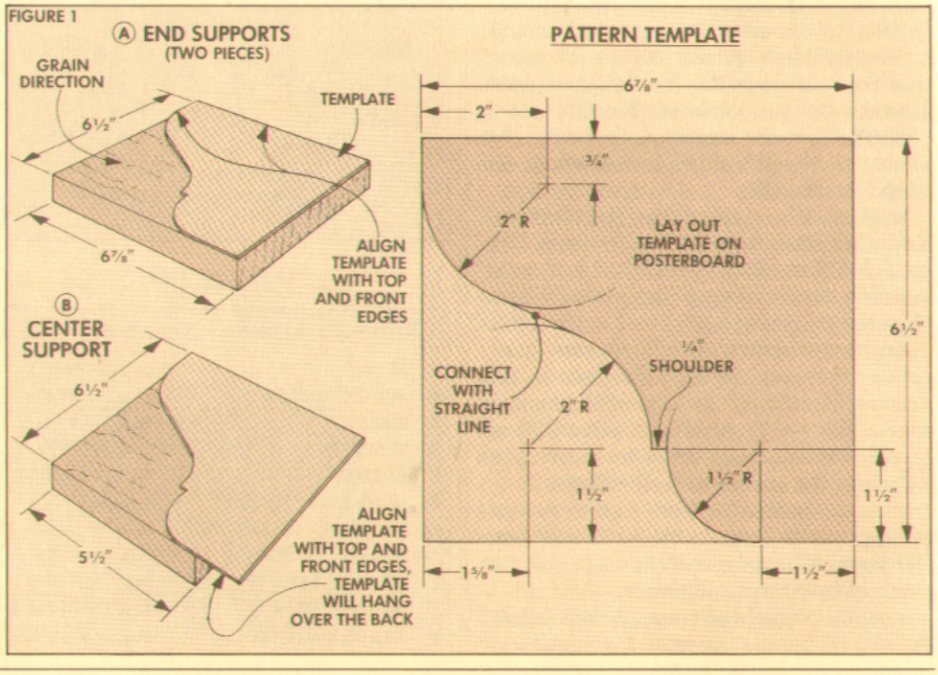

DADOES

The supports are connected to the back with tongue and dado joints, see Fig. 2. I started by cutting the dadoes. (All dadoes are ½" wide by ⅛" deep.)

DADO IN BACK. The first dado is for the center support (B). It's centered on the length of the back (C), see Center Joint Detail in Fig. 2.

END SUPPORT DADOES. Next, a dado is cut across the inside face of both end supports (A) to join them to the back. These dadoes are positioned to allow ¾" between the back and the wall for the hanging bracket, see End Joint Detail in Fig. 2.

POSITION. To position these dadoes on the end supports, I used the table saw fence as a stop, see Fig. 3. Lock the fence down so it cuts the groove ⅞" from the end of the support piece. (When the tongue is fitted into this groove, the back surface will be ¾" from the wall, refer to Fig. 2.)

TONGUES

After cutting the dadoes, tongues are formed on the end of the center support (B) and at both ends of the back (C) to fit into the dadoes. I formed these tongues by cutting two rabbets with a combination blade on the table saw.

AUXILIARY FENCE. Since the rip fence has to be locked down next to the blade, I screwed a piece of plywood to the fence to protect it. Then raise the blade until it leaves a tongue that fits the dadoes (½" thick) on the ends of the pieces, see Fig. 4.

Note: Practice on scrap until the tongue fits the dadoes tightly. Then cut the tongues on the back and center support.

PEGS

After the joints are finished, the eight Shaker pegs can be installed, see Sources, page 24. Ordinarily, these pegs are glued into holes. But I've found they usually come loose, so I came up with a way of screwing them to the back.

MODIFY PEGS. The 3½"-long Shaker pegs I used for the shelf have a ½"-dia. tenon on the end. This tenon is cut off to a length of ⅜". Then drill a 1/16"-dia. pilot hole into the end, see Fig. 5.

MOUNTING HOLES. Next, ½"-dia. holes are bored in the back (C). These holes are 5" on center, and centered 3" up from the bottom edge of the back, see Fig. 5.

Note: Each set of four pegs is centered between the center support and the end support. In my case, the first hole and the fourth hole had to be 2⅝" from the *end* of the back and from the *shoulder* of the center dado respectively, see Fig. 5.

SHANK HOLES. After the ½"-dia. holes are bored ⅜" deep, drill 5/32"- dia. shank holes all the way through. These holes are for the No. 6 x 1" woodscrews used to hold the pegs to the back.

FIGURE 2

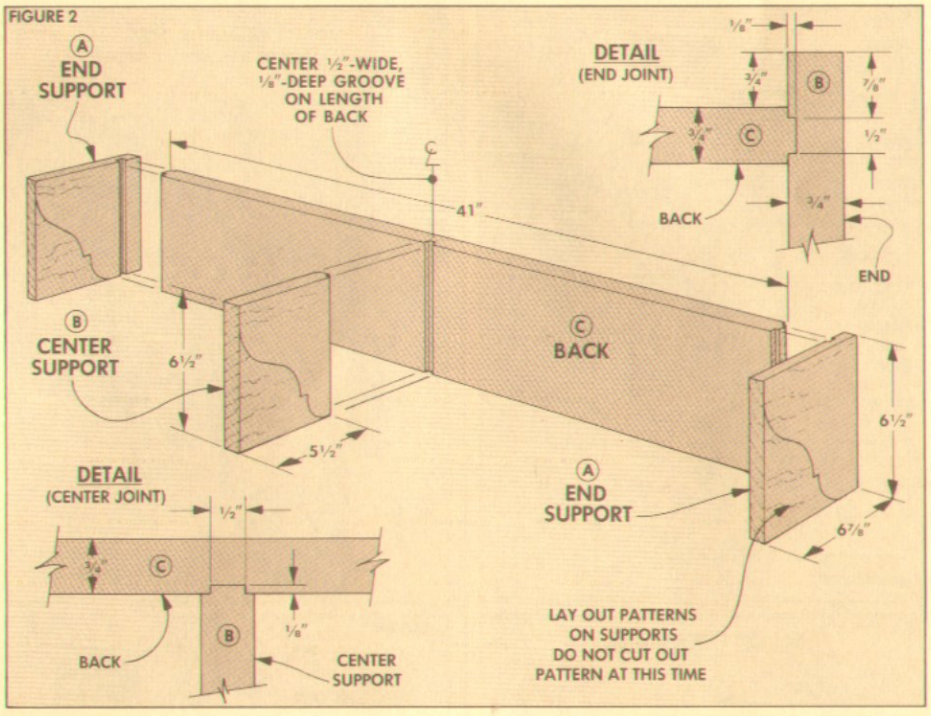

FIGURE 3

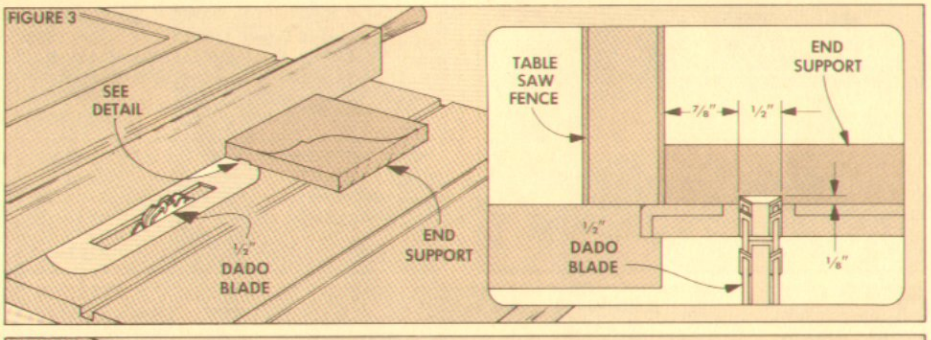

FIGURE 4

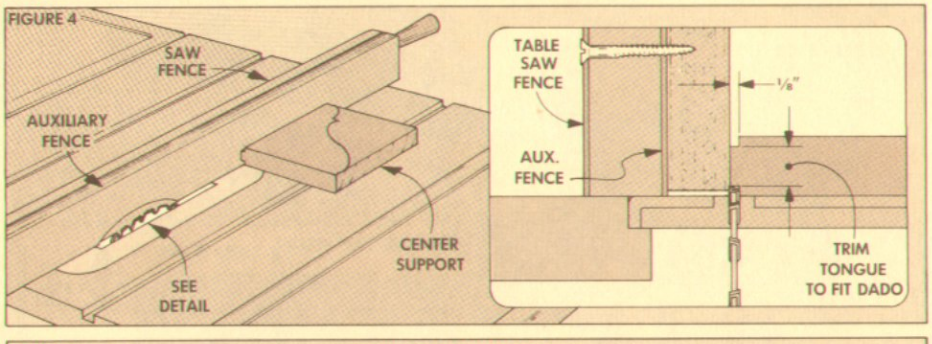

FIGURE 5

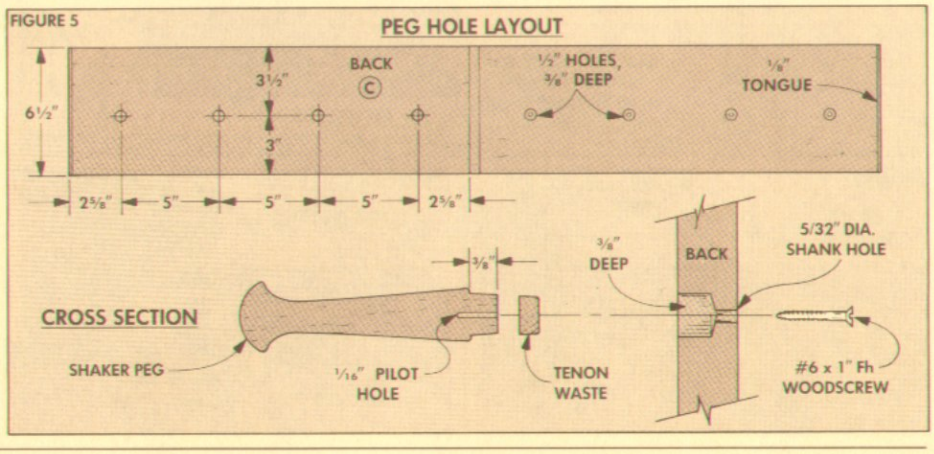

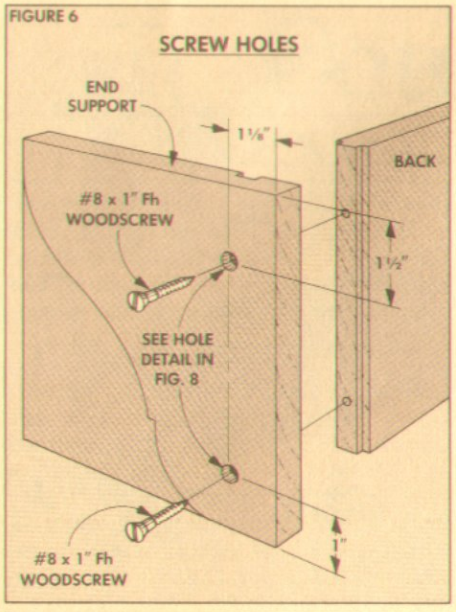

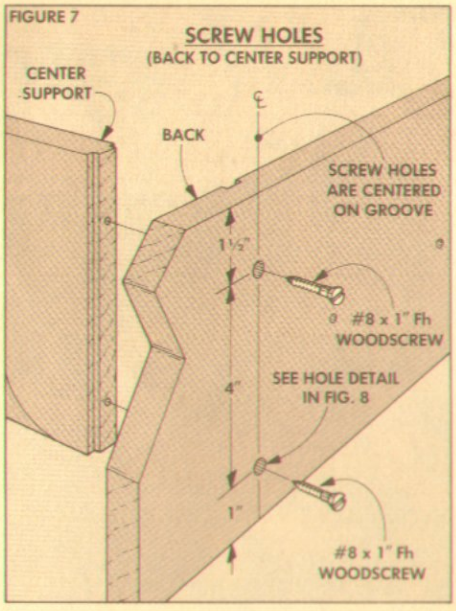

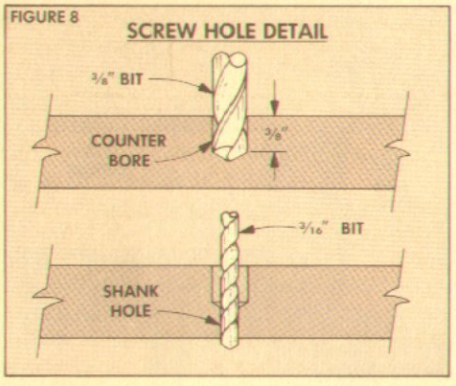

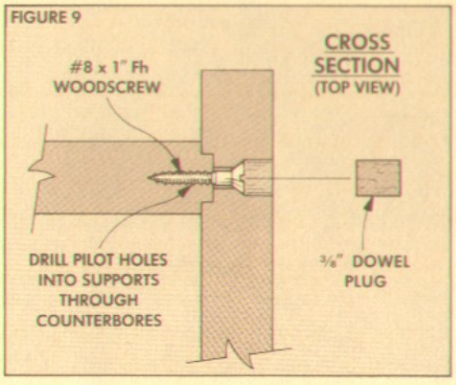

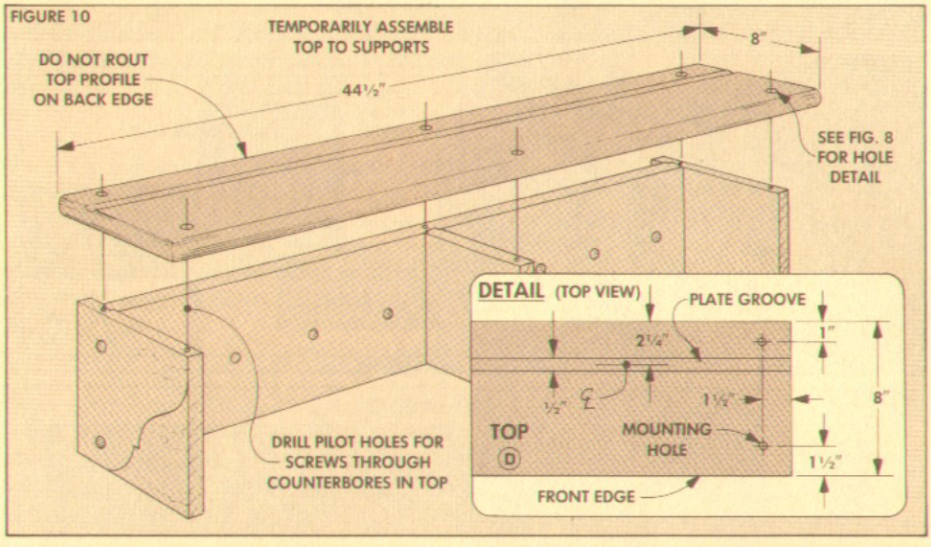

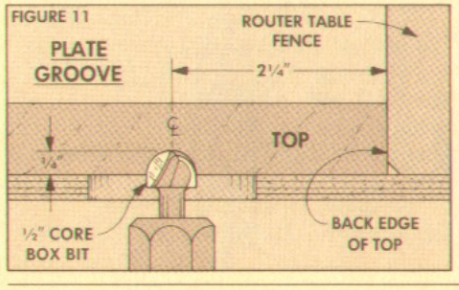

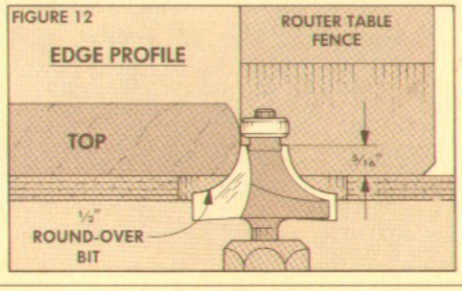

SCREW SUPPORTS TO BACK

The next step is to temporarily assemble the supports and back in order to fit the top. This is done by screwing the pieces together.

POSITION OF SCREW HOLES. To set the position of the screws, mark points on the end supports centered over the dado (1⅛" from the back end), see Fig. 6. The top screw hole is 1½" down from the top of the support, and the bottom hole is 1" up from the bottom.

The screw holes for the center support are centered over the dado in the back, see Fig. 7.

COUNTERBORE. All of the screw holes (except on the back) are counterbored for ⅜" plugs to conceal the heads of the No. 8 x 1" woodscrews. To do this, begin by boring ⅜"-dia. holes ⅜" deep, see Fig. 8. Then drill shank holes the rest of the way through with a 3/16" bit.

PILOT HOLES. After drilling the shank holes, align the supports with the back, drill 1/16" pilot holes, and screw the parts together, see Fig. 9.

THE TOP

Now the top (D) can be cut to a finished length of 44½". (This length is so it extends beyond the end supports 1⅛" on both ends.)

MOUNTING HOLES. After the top is cut to size, drill counterbored holes to mount it to the supports and back. The holes over the end supports are 1½" in from the ends, see Detail, Fig. 10. The holes over the center support are centered on the length.

Note: The holes toward the front of the top are positioned 1½" from the front edge. The holes at the rear are positioned 1" from the rear edge so they're centered between the edge and the plate groove.

PLATE GROOVE. If this shelf is used to display plates, a plate groove has to be cut to keep plates from sliding off the shelf. I used a ½" core box bit on the router table, see Fig. 11.

Center the groove 2¼" from the rear edge of the top. Then rout to a depth of ¼" in two passes. (Make the second pass over the bit very light and fast to eliminate burn marks.)

EDGE PROFILE. After routing the plate groove, rout a bullnose profile on the front edge and both ends of the top with a ½" round-over bit. (Be sure to leave the back edge square.)

To rout this profile, raise the bit only 5/16" high, see Fig. 12. Then rout the ends first and finish with the front edge.

CUT SUPPORTS TO SHAPE

The top is complete, but before mounting it, unscrew the three supports so they can be cut to finished shape.

SAW PROFILE. I cut the profile on a band saw, see Fig. 13. Then sand the curves smooth with a drum sander.

CHAMFER EDGES. Next, the profiles of the curved edges are chamfered with a chamfer bit. Set the bit just high enough to leave a 1/16"-wide chamfer, see Fig. 14.

Note: The inside corner (where the curve meets the shoulder) has to be cut with a chisel to blend it into the rest of the chamfered edge, see Detail in Fig. 14.

ASSEMBLE SHELF PARTS. After all the supports are chamfered, the parts can be assembled. Begin by sanding the surfaces smooth. Next, screw the back, supports, and top together. Then plug the screw holes with 3/8" dowel plugs, see Fig. 15.

MOLDING STRIPS

After the shelf was assembled, I dressed it up with cove molding strips. Although these moldings can be bought, I made my own with the router table and table saw.

ROUT COVE. The first step in making the moldings is to rout a cove on both edges of the molding stock (E), see Step 1 in Fig. 16. When doing this, set the fence on the router table so the pilot on the cove bit is in line with the face of the fence.

Next, raise the bit and make some practice cuts on a piece of 3/4"-thick scrap. Adjust the height of the bit so the shoulder (above the cove) is 1/4" thick, see Fig. 16. Then rout the cove on both edges of the molding stock.

CUT OFF MOLDINGS. To cut the coved edges that become the moldings off on the table saw, lock the fence 3/4" from the blade. Then flip the stock over (so the coves face up), and rip the molding strips from the edges, see Step 2 in Fig. 16.

ATTACH MOLDINGS. After the moldings are cut, they're attached to the shelf. Begin by mitering the ends to fit. Then fasten the moldings in place with wire brads. (Don't glue them in place— they should be able to "move" as the top expands and contracts.)

HANGING BRACKET

The last step before finishing the shelf is making a bracket to hang it on the wall.

BRACKET STRIP. The shelf is hung on interlocking beveled strips. To make these strips, rip a piece of stock (F) 3" wide, see Fig. 18. Then rip this piece in half at a 45° angle to make the two parts of the bracket.

BRACKET PARTS. To mount the parts of the bracket, screw one half into the back of the shelf just below the top, see Fig. 18. The other half is screwed to the wall with No. 8 x 2" flathead woodscrews. (Position the screws so they hit on a stud.)

FINISHING TOUCHES

All that's left is to tighten the pegs in place with No. 6 x 1" flathead woodscrews. Then I applied the same stain and finish used on the Pie Safe, see pages 20-21.

FIGURE 13

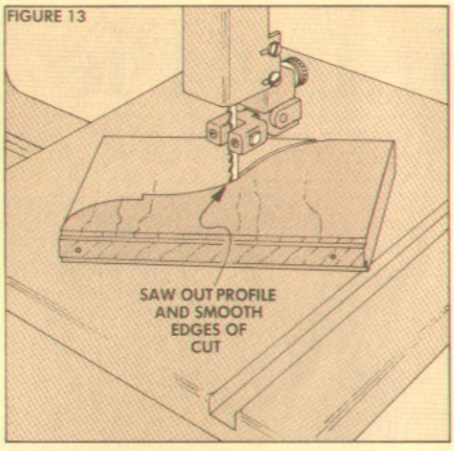

FIGURE 14

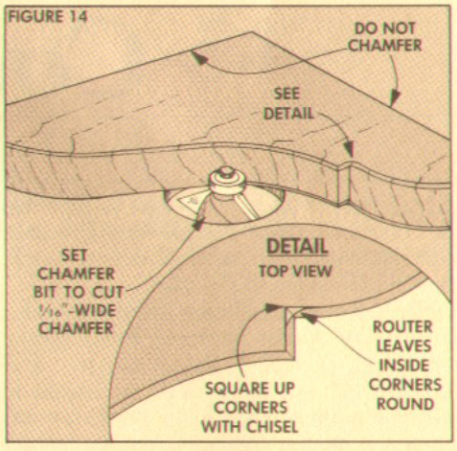

FIGURE 15

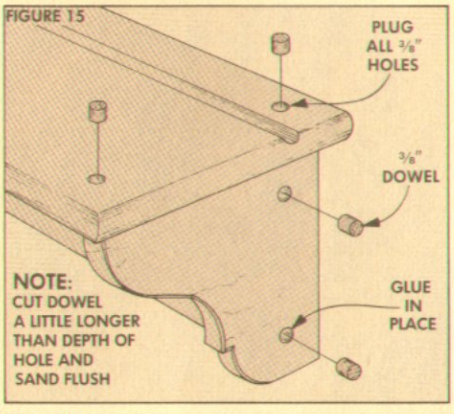

FIGURE 16

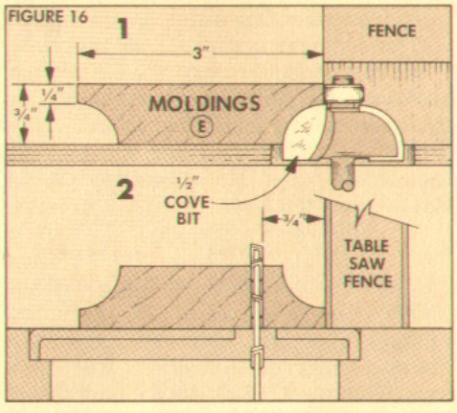

FIGURE 17

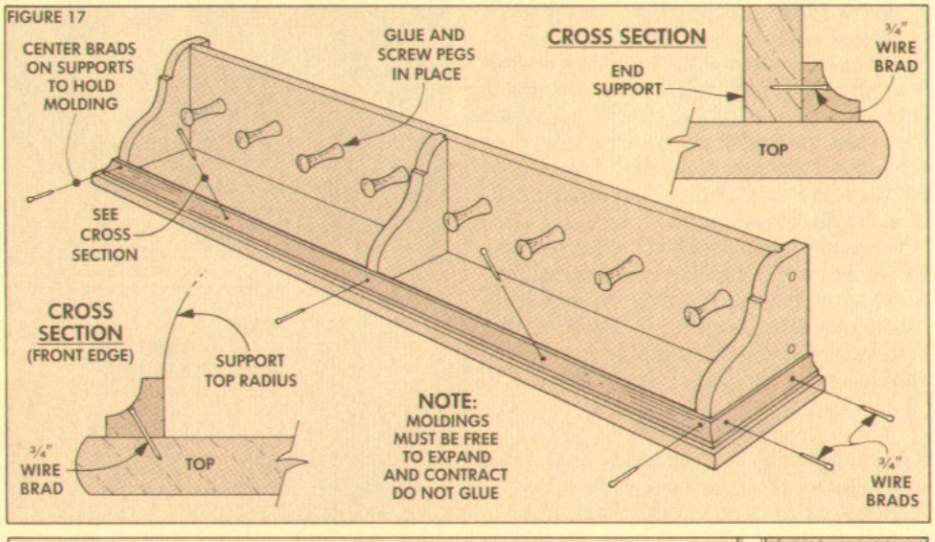

FIGURE 18

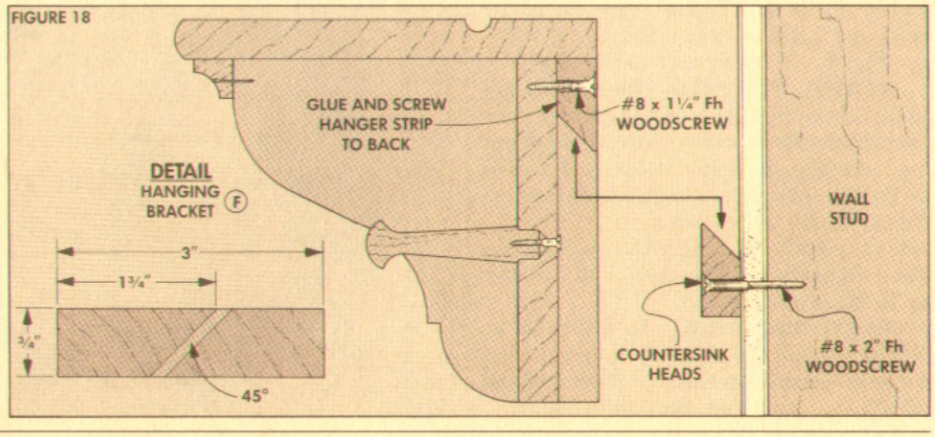

Country Pie Safe

A NEW ANTIQUE WITH PUNCHED TIN PANELS

There were a lot of questions to consider as I started building this pie safe. The main attraction is the tin panels. But how do you punch the design in the tin?

Then if you're building an old pie safe, what wood should be used? Pine, knotty or clear? Should it be distressed and finished to look old? Since the cabinet is nailed together, it would be nice to use old square nails, but where can you get them?

And the most important question: Who will bake enough pies to fill the shelves?

We've managed to answer most of these questions (I'm still working on the pies) in this article and the two that follow.

One of the first decisions was to build the cabinet out of No. 2 common pine. I started with the legs.

LEGS

The legs actually run the full height of the cabinet and also serve as the stiles (uprights) for the front, side, and back frames. Begin by cutting four front/back legs (A) from ¾"-thick stock to a width of 3" and a rough length of 56", see Fig. 1. (This is 2" longer than final length.)

SIDE LEGS. Each corner of the pie safe is actually two legs (a front/back leg and a side leg) nailed together, see Fig. 1. Since I wanted the width of the legs to appear the same from the front and the sides, I cut the side legs (H) ¾" narrower (2¼") than the front/back legs.

BOTTOM PROFILE. Next, a curved profile is cut on the bottom of all eight legs. Start by laying out the pattern on a cardboard template, see Fig. 1. Then cut the template to shape and use it to lay out the profile on the legs, see Detail in Fig. 1.

FRONT FRAME

After the profiles are cut on the legs, work can begin on the front frame.

RAILS. Start by ripping three rails to width: a top rail (B) 1½" wide, a middle rail (C) 1", and a bottom rail (D) 2" wide, see Fig. 2. All three rails are 34" long.

MORTISE AND TENONS. These rails are joined to the front legs (A) by cutting mortises along the *inside* edges of the front legs, see Fig. 2. (Lay out the positions of the mortises by measuring up from the bottom of the legs. For each mortise, allow an amount equal to the full width of the rail.) Then cut tenons on the ends of all the rails to fit the mortises.

GROOVE MIDDLE RAIL. In order to be able to mount the drawer runners later, cut a ¼" groove on the *inside face* of the middle rail, see Cross Section in Fig. 2.

FIGURE 1

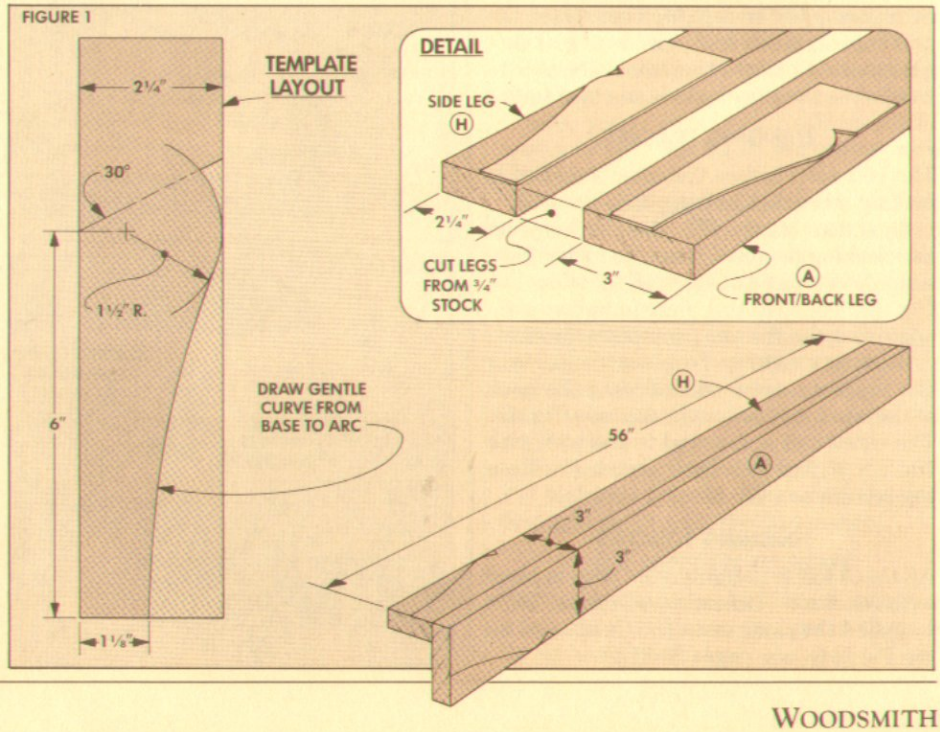

DRAWER DIVIDER. After the groove is cut, dry assemble the frame and measure the distance between the top and middle rails. Then cut a drawer divider (E) to this length and 4″ wide, see Fig. 2. Center the divider on the rails and screw it in place.

ASSEMBLY. Now the rails can be glued to the front legs. (I also added square wooden pegs through all the mortise and tenon joints in this project, see page 23.)

SIDE FRAMES

After the front frame is clamped up, you can begin work on the side frames. I designed the side frames so the inside dimension of the pie safe would be as deep as standard upper kitchen cabinets (11″). If you want a deeper cabinet, the side rails will have to be longer and the panels wider.

RAILS. To make the side frames, start by ripping the top rails (I) 1½″ wide, the middle rails (J) 2″ wide, and the bottom rails (K) 4″ wide, see Fig. 4. Then cut all six rails 9½″ long, see Fig. 3.

MORTISE AND TENONS. After the rails are cut to size, cut mortises on the inside edges of both side legs (H), see Fig. 3.

Note: Unlike the mortises on the front frame, the mortises on the side frames are narrower than the side rails (¼″ narrower than the top and bottom rail, and ½″ narrower than the middle rail). This is because the tenons are, in effect, trimmed down that amount when the grooves (for the panels) are cut in the rails, see Fig. 4.

After the mortises are complete, cut the tenons on the rails. Then cut ¼″ grooves on the edges of the rails, see Fig. 4. (This will trim the tenons to fit the mortises.)

GROOVES IN LEGS. There's one more set of grooves to cut for the panels — on the *inside edge* of the side legs (H). The trick is to stop the groove before it cuts through the profile at the bottom of the legs. I used a pencil mark on the leg and a piece of tape on the table saw to mark where to stop the cut, see Fig. 5.

PANELS. Now the panels can be made. Start by gluing up enough ½″ stock to make two top panels (L) and two bottom panels (M). (Note: For one way to cut a ¾″-thick panel down to ½″, see page 23.)

To allow for expansion, trim the panels ⅛″ less than the distance between the bottom of the grooves, see Fig. 3.

TONGUE. Now, to fit the panels into the grooves, cut a rabbet on the back edges of each panel to form a tongue along the front edge that fits in the groove, see Fig. 6.

ASSEMBLY. After the rabbets are cut, the side frames can be glued and clamped square. Don't glue the panels into the grooves. (However, I did put a dot of glue at the center of the top and bottom to hold the panel centered in the frame.)

After the side frames are assembled, cut the excess "ears" off the top ends of the side legs and front legs, see Fig. 6.

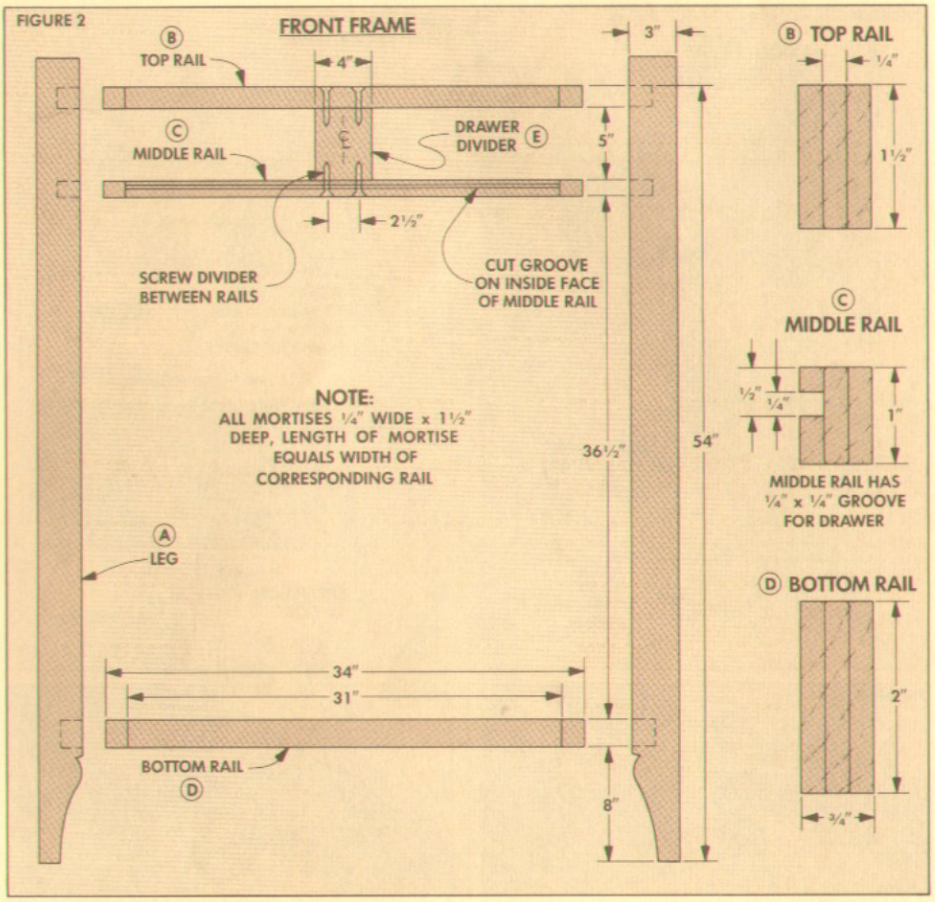

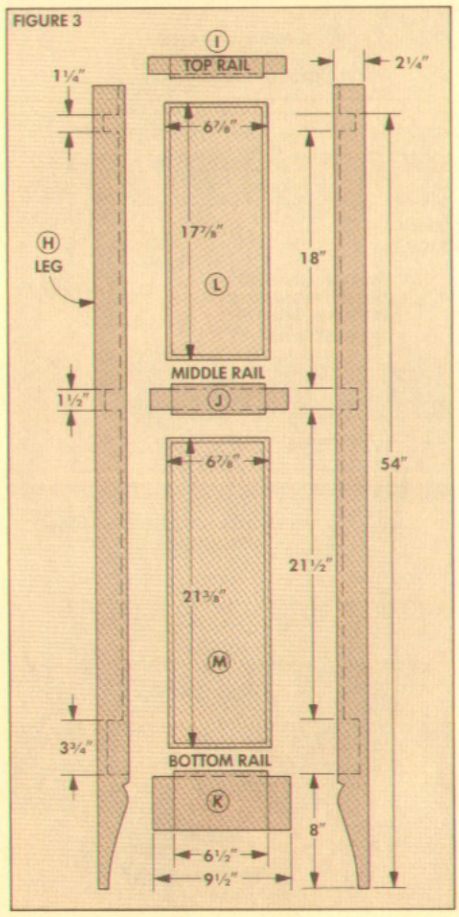

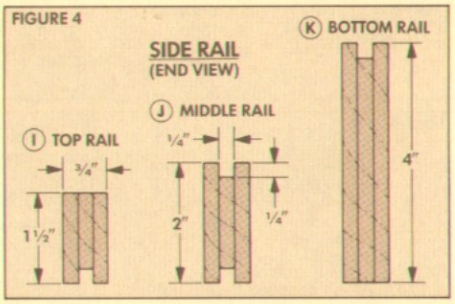

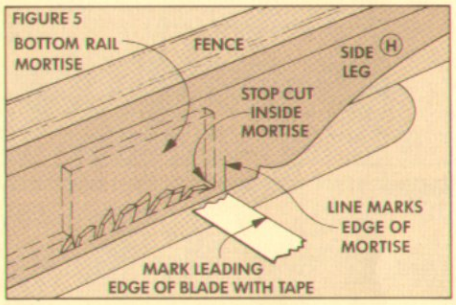

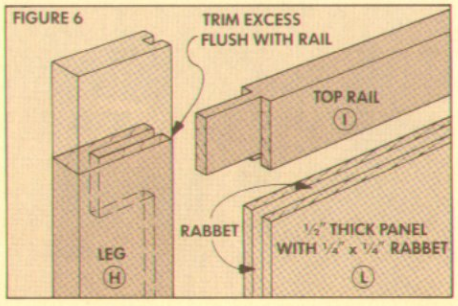

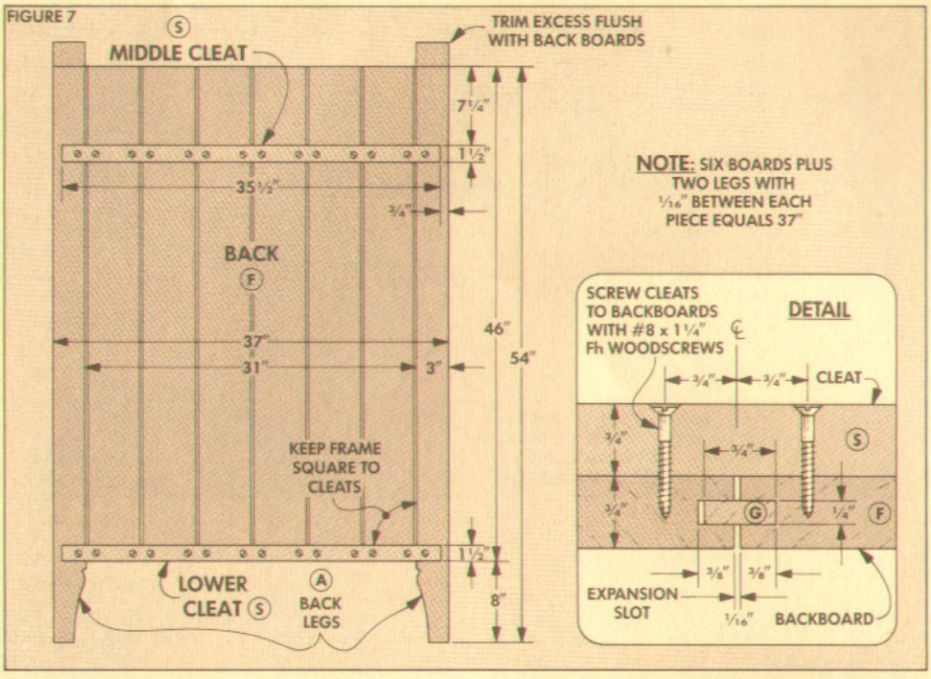

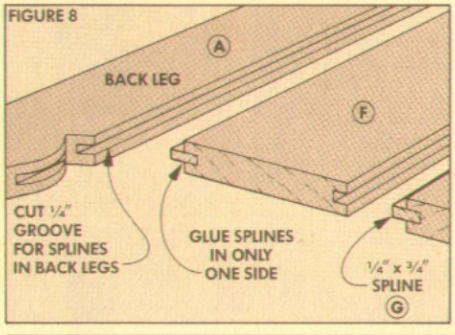

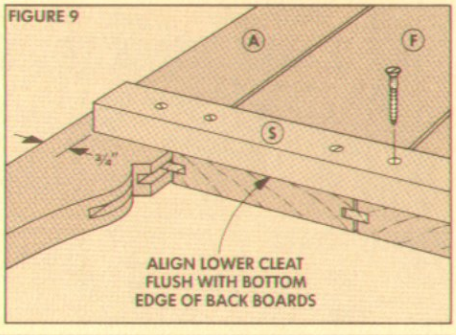

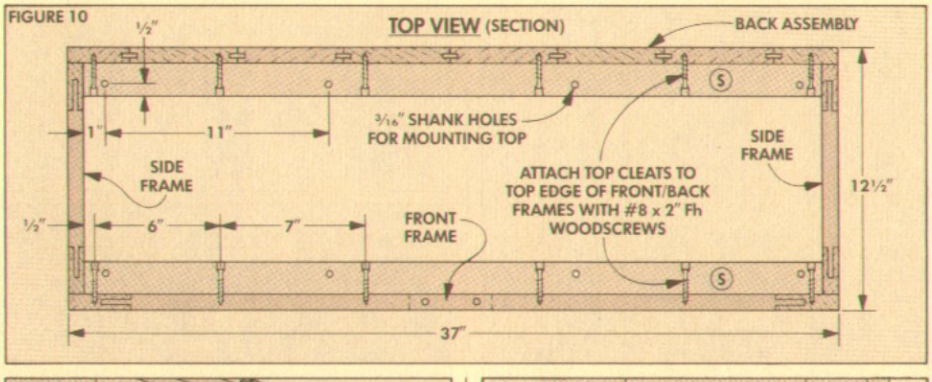

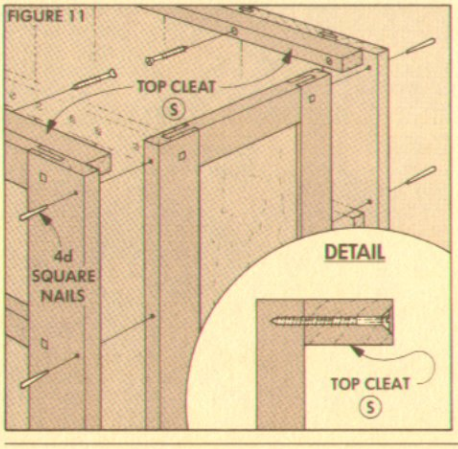

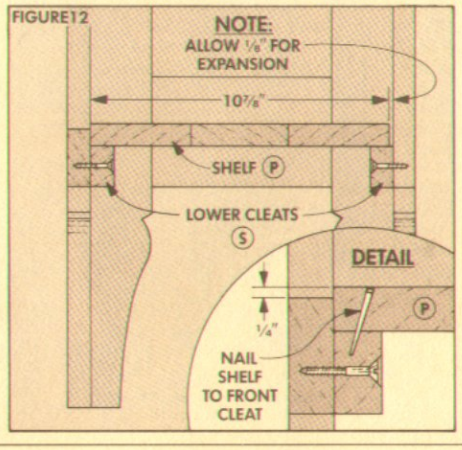

BACK ASSEMBLY

After the side frames were complete, I began work on the back. It's made from six boards connected between the two back legs. The problem is to connect the boards allowing for expansion/contraction. I did this with cleats, see Fig. 7.

BACK BOARDS. The total width of all six back boards (F) together must equal the shoulder-to-shoulder distance (31") of the front frame rails, refer to Fig. 2. After I cut the boards so they added up to a total of 31", I trimmed an extra 1/16" off each board to allow for expansion. Then cut all the boards 46" long, see Fig. 7.

SPLINE GROOVES. To align the boards for the back, I used ¼" splines set into ⅜"-deep grooves cut in the edges of the boards, see Fig. 8.

SPLINES. After the grooves are cut, cut ¾"-wide splines (G) to fit the grooves. Then glue the splines into one side of each board, see Fig. 8. (Don't glue the splines into adjoining edges or the boards won't be able to expand/contract.)

ASSEMBLE THE BACK. To assemble the back, space the pieces out evenly until the overall width of the back equals the width of the front frame (37"). Make sure that the bottom ends of the boards for the back are squared-up 8" from the bottom of the legs.

Next, cut two cleats (S) to hold the back together. Cut them to length so they stop ¾" from each side, see Fig. 9.

Screw (don't glue) the two cleats down across the assembly with two screws in each board to prevent racking, see Fig. 9. The bottom cleat is aligned flush with the bottom edge of the boards.

The alignment of the middle cleat is based on the position of the middle rail on the front frame, refer to Fig. 16.

When the back is assembled, cut the excess "ears" off the top of the back legs, 54" up from the bottom.

ASSEMBLING THE CABINET

Before assembling the cabinet, cut two more cleats (S), and screw them *on edge* to the inside of the front frame and the back assembly flush with the top, see Figs. 10 and 11. To support the bottom shelf, screw one more cleat to the inside of the front frame, see Fig. 12.

ASSEMBLY. Now the cabinet parts can be nailed together, see Fig. 11. You could use standard 4d finishing nails, but I used square nails, see page 24. To prevent splitting when driving square nails, drill ⅛" holes (every 8"), see Fig. 11.

SHELVES. Once the cabinet is assembled, edge-glue enough ¾" stock to make three shelves (P) (one fixed and two adjustable). To allow for expansion, cut the shelves ⅛" narrower than the inside depth of the cabinet, see Fig. 12. Then install the bottom shelf and nail it to the front cleat.

DRAWERS

To build the two drawers, cut four drawer front/backs (T) to the size of the drawer openings, see Fig. 13. Next, cut four drawer sides (U) 11″ long.

JOINERY. To join these pieces, cut ½″-deep rabbets in the fronts/backs, see Fig. 13. Also, cut ¼″-deep grooves (for the bottom panel) in the front and side pieces.

BOTTOM. To make the drawer bottom (V), edge-glue ½″ stock and cut a ¼″ tongue on the front and side edges.

ASSEMBLY. Once all the pieces are cut, glue and nail the front (T) to the sides (U). Then slide the bottom (V) into the grooves from the back. (Don't glue it in.)

The drawer back (T) sits on top of the bottom (V) and has to be cut to width. When it's cut, glue and nail it to the sides. Then, to hold the bottom in the grooves, tack a small nail up into the back.

After the drawers are assembled, screw a roundhead screw into the back to act as a depth stop, see Detail in Fig. 13.

DRAWER RUNNERS. The drawers ride on maple runners. Cut one middle runner (W) 5½″ wide and two outside runners (X) 2″ wide. The length equals the inside depth of the cabinet plus ⅛″.

To mount the runners, cut rabbets on the front end to produce a ¼″ tongue. Then slip the tongues in the groove in the middle front rail (C) and screw the back end down to the cleats, see Fig. 15.

DRAWER GUIDES. We've developed a drawer guide system that has a single maple guide (Y) mounted above the center of each drawer. The guide has a groove to accept a guide pin made from a woodscrew. This pin is screwed into the top of the drawer back, see Back Detail in Fig. 13.

Before mounting the guides, plane a chamfer on the bottom back edge of the drawer sides so the drawers can be tipped into the opening, see Fig. 16.

Then to mount a drawer guide, hold the guide up under the top cleats and slide the drawer in. Then screw the back end of the guide in place.

Next pull the drawer until it's almost out of the cabinet and centered in the opening. Then screw the front of the guide in place.

CABINET TOP

Now the cabinet is ready for the top. Edge-glue the top (N) from three pieces of stock and cut it 1¼″ wider and 2½″ longer than the cabinet, see Fig. 15.

To attach the top, first drill shank holes through the top cleats, see the hole locations in Fig. 10. Then center the top on the cabinet and flush with the back and screw (don't glue) it down from the inside, see Fig. 16.

MOLDING. I also added a ¾″ quarter-round molding strip (O) to fit under the top, see Fig. 15.

FIGURE 13

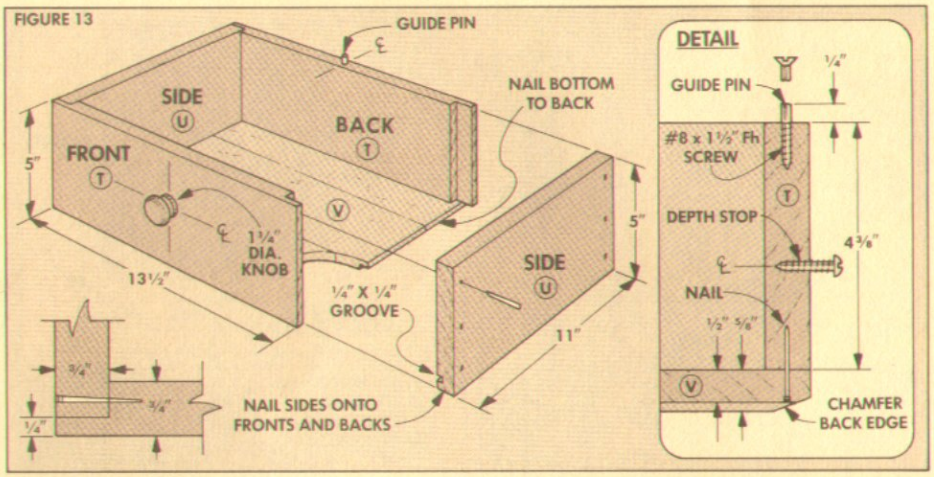

FIGURE 14

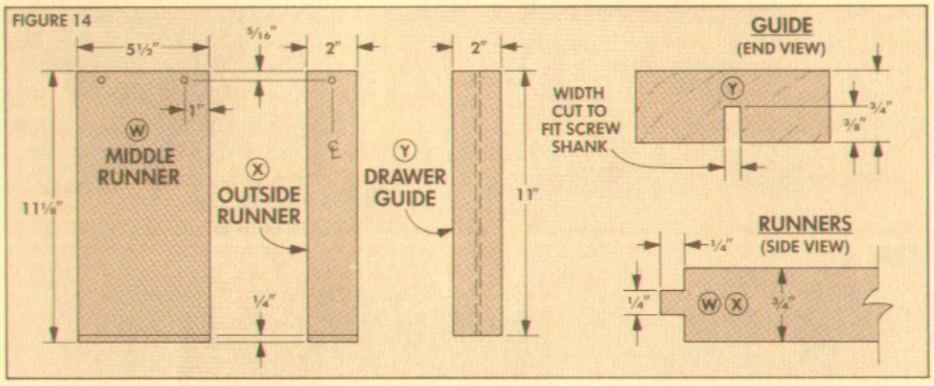

FIGURE 15

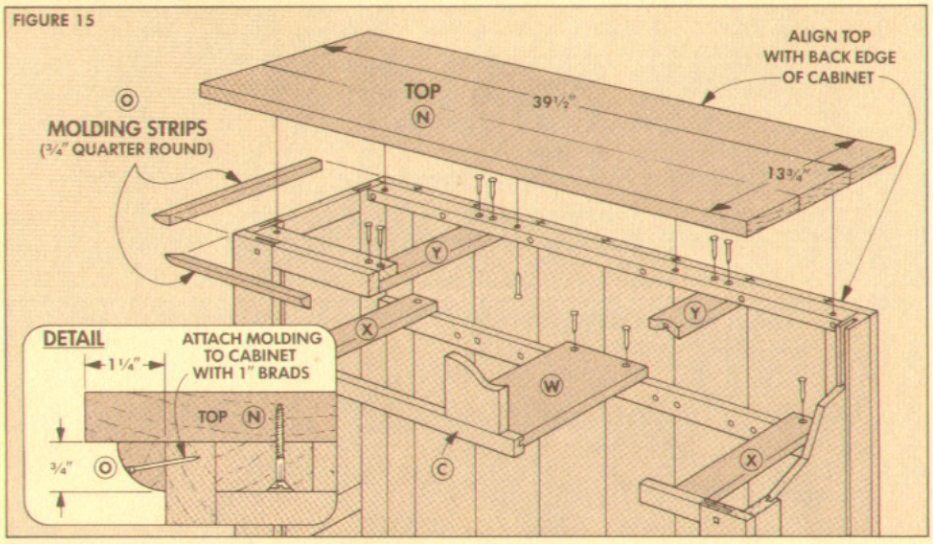

FIGURE 16

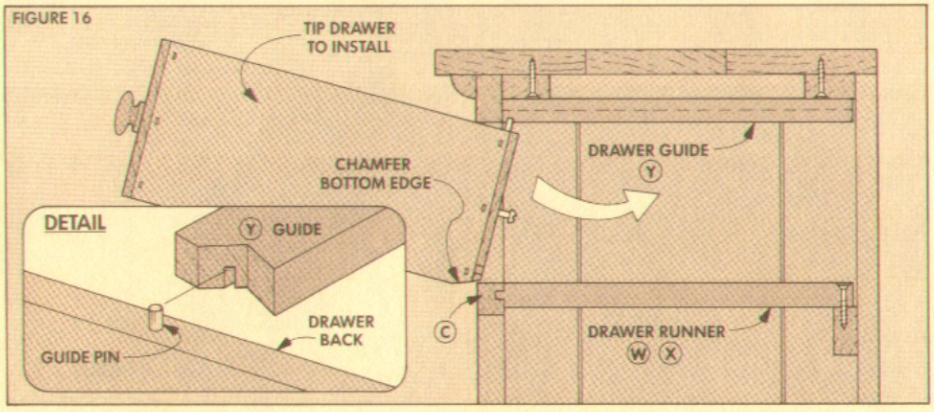

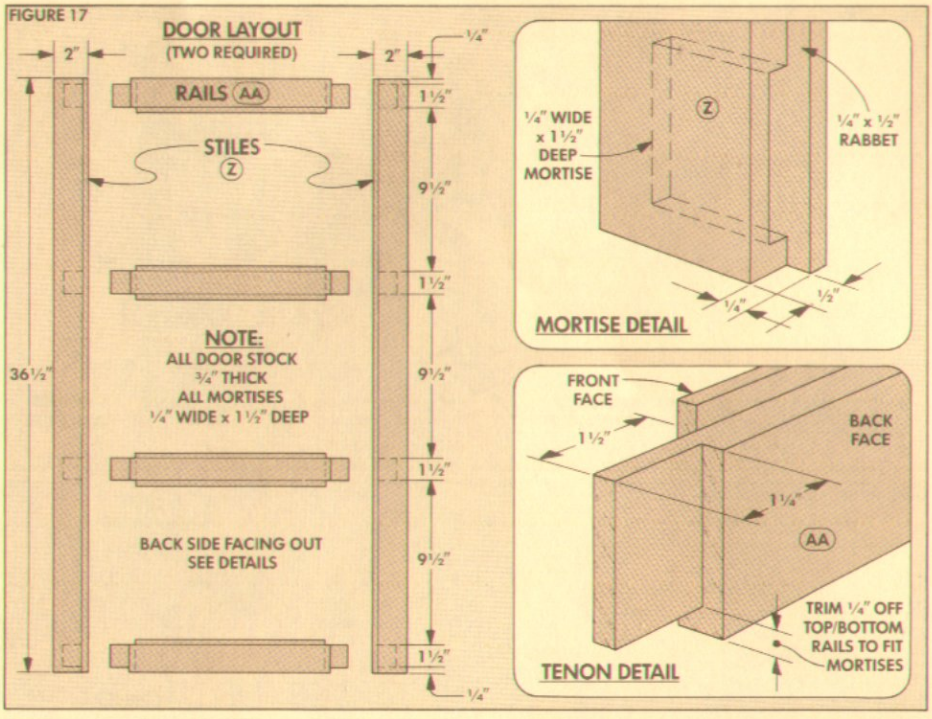

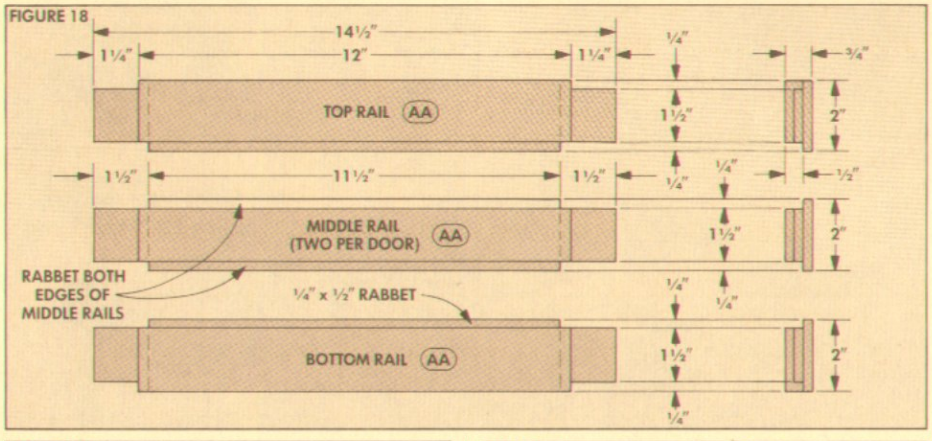

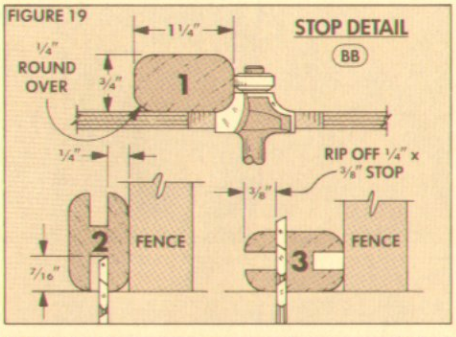

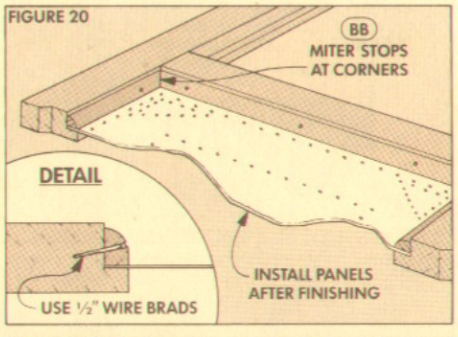

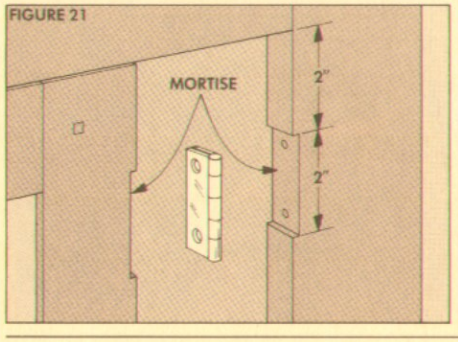

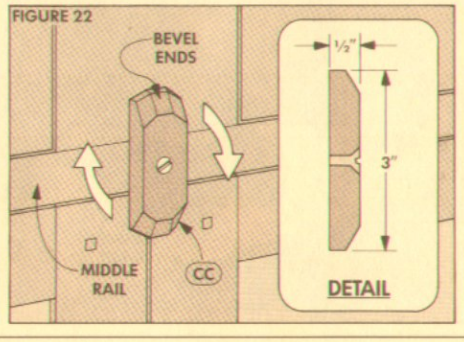

THE DOORS

The focal point of this whole cabinet is the doors with the punched tin panels.

STILES. To make the door frames, begin by cutting four door stiles (Z) to a width of 2" and to length to match the exact height of the cabinet opening (36½" in my case), see Fig. 17. (Note: I cut the door parts to fit tight into the opening and then planed them down after assembly.)

After the stiles are cut to size, cut four mortises on the *inside* edge of each stile to accept the rails, see Fig. 17.

RAILS. To determine the length of the door rails (AA), measure one half the cabinet opening (15½"), subtract the width of two stiles (4") and add in the length of two 1½"-long tenons (3"). In my case this total came to 14½". Then cut eight rails to this length and 2" wide, see Fig. 18.

RABBETS. Before cutting the tenons on the rails, cut a ¼" x ½" rabbet to hold the tin panels. These rabbets are cut on the back edge of the rails and on the stiles, see Figs. 17 and 18.

TENONS. Next, cut tenons on all the rails. However, when the rabbet was cut on the back of the stiles, it created staggered shoulders, see Mortise Detail in Fig. 17. So, cut the tenon's shoulder on the *front* face 1½" from the end. But the shoulder on the *back* face is cut only 1¼" from the end to allow the tenon to "fill in" the rabbet, see Tenon Detail in Fig. 17.

ASSEMBLY. After the tenons fit the mortises, dry-assemble the doors and test fit them in the openings. If they fit, glue all the door parts together. (Shop Note: After assembly, I clamped the door parts for about two minutes until the glue "grabbed" and then pushed the doors into the opening to hold them until they dried.)

After the glue dries, remove each door and plane the edges to create a 1/16" gap between the door and the frame and ⅛" between the doors.

STOPS. When the tin panels are mounted, they're held in place with stop moldings (BB). To make the stops, round over all four edges of a piece of ¾" stock, see Step 1 in Fig. 19. Then make four cuts to form an "H-shaped" block, see Step 2. Finally, rotate the block on its side and trim off the stop moldings, see Step 3.

After the stop molding is made, I cut the tin panels to fit into the openings. (For more information on punching and aging the tin, see pages 18-19.) Once the tin is in place, the stops can be mitered to fit. (However, I didn't install the tin until after the finish was applied.)

HINGES AND KNOBS. Now the doors are mounted to the front frame with three butt hinges on each door. Cut the mortises for the hinges in the door frame and front frame, see Fig. 21. Also, drill the holes for 1¼" dia. wooden door knobs.

TURNBUCKLE. The doors are held closed with a turnbuckle (CC) cut from a piece of ½" stock, see Fig. 22. Pare bevels on the ends of the turnbuckle with a chisel, and then screw it to the middle rail so when it's turned it holds both doors closed.

SHELVES

The last step on the pie safe is to install the two adjustable shelves. I decided to use an old-fashioned notched system to hold the shelves, refer to Fig. 24.

STANDARDS. I cut all four standards (Q) from one 3" wide by 36" (rough length) board. (This keeps the notches in all four shelf standards aligned.) Lay out the notches on the edge of the board and make the 45° angled cuts, see Detail in Fig. 23.

Then make the 90° cuts so they meet the ends of the angled cuts. (If the two cuts don't meet perfectly, clean out the bottom of the notch with a chisel.)

To cut the workpiece to final length, measure the distance from the bottom shelf to the bottom of the cleat below the drawers. Then cut the workpiece to this length, and rip it into four ½"-wide standards, see Fig. 23.

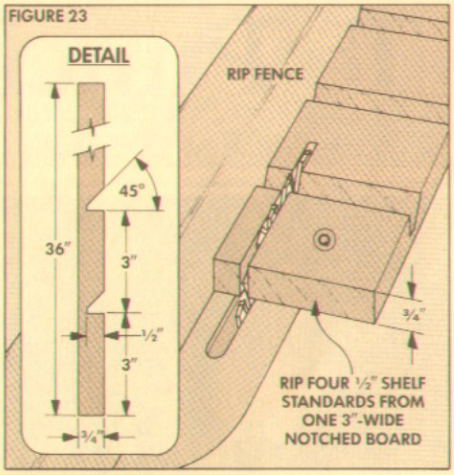

Nail each standard into a corner of the cabinet with the bottom end resting firmly on the bottom shelf, see Fig. 24.

SUPPORTS. Next, cut four shelf supports (R) with chamfered ends to fit the notches in the standards, see Fig. 24.

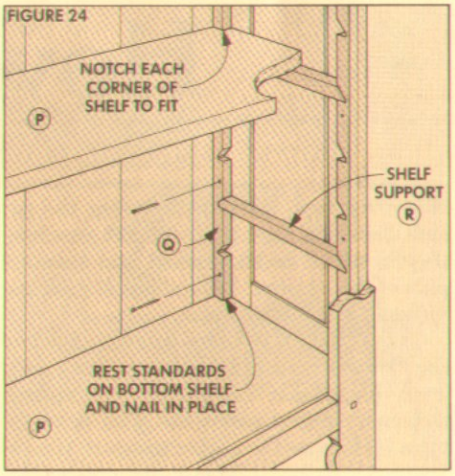

NOTCH THE SHELVES. Finally, a notch is cut in each corner of the shelves to allow them to fit around the standards.

After finishing the pie safe (see pages 20-21) and installing the tin panels (see pages 18-19), the only step left is finding a pieman to bake enough warm, homemade pies to fill it up.

MATERIALS LIST

Overall Dimensions: 39½"w x 13¾"d x 54¾"h

FRONT/BACK FRAMES		
A	Front/Back Legs (4)	¾ x 3—56 rgh.
B	Top Front Rail (1)	¾ x 1½—34
C	Middle Front Rail (1)	¾ x 1—34
D	Bottom Front Rail (1)	¾ x 2—34
E	Drawer Divider (1)	¾ x 4—5
F	Back Boards (6)*	¾ x 5¼—46
G	Back Splines (7)	¼ x ¾—46
SIDE FRAMES		
H	Side Legs (4)	¾ x 2¼—56 rgh.
I	Top Side Rails (2)	¾ x 1½—9½
J	Middle Side Rails (2)	¾ x 2—9½
K	Bottom Side Rails (2)	¾ x 4—9½
L	Top Side Panels (2)	½ x 6⅞—17⅞
M	Bottom Side Panels (2)	½ x 6⅞—21⅜
TOP/SHELVES		
N	Top (1)**	¾ x 13¾—39½
O	Top Molding Strip (1)	¾ x ¾—72"
P	Shelves (3)**	¾ x 10⅞—35½
Q	Shelf Standards (4)***	¾ x ½—36 rgh.
R	Shelf Supports (4)***	¾ x ½—11 rgh.
S	Cleats (5)	¾ x 1½—35½
DRAWERS		
T	Drawer Front/Backs (4)	¾ x 5—13½
U	Drawer Sides (4)	¾ x 5—11
V	Drawer Bottoms (2)**	½ x 10½—12½
W	Middle Runner (1)	13/16 x 5½—11⅛
X	Outside Runners (2)	13/16 x 2—11⅛
Y	Drawer Guides (2)	13/16 x 2—11
DOORS		
Z	Door Stiles (4)	¾ x 2—36½
AA	Door Rails (8)	¾ x 2—14½
BB	Tin Stops	¼ x ⅜—30 ft. total
CC	Turnbuckle	½ x ⅞—3

* All back boards must add up to 31" wide.
** Edge-glue from three narrow boards.
*** Four cut from one 3"-wide board.

CUTTING DIAGRAM

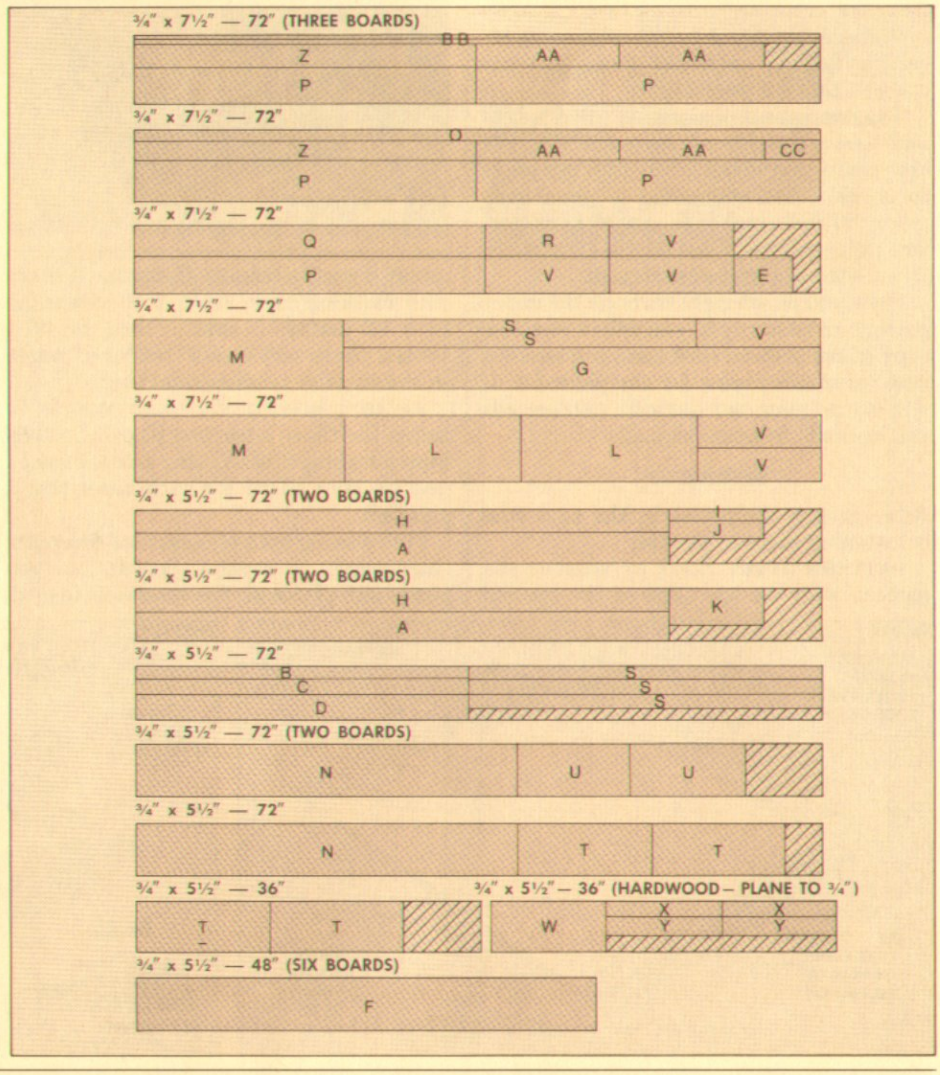

How To Punch Tin

IT'S A 'HOLE LOT OF FUN

When we first started designing the pie safe shown on page 12, I thought punching the tin would be the easiest and quickest part of the project. I found out it's not too difficult, but it isn't quick.

There are 1,343 holes in each panel of the "Hearts on a Blanket" design we used in our pie safe. It took a little over an hour to punch the first panel, but after developing a technique I was able to punch the remaining panels in about 45 minutes each.

Punching a panel is fun, but tedious work. Your hands, forearms, and eyes quickly tire. This project made me realize (once again) that I'm not as young as I used to be. I'd recommend spreading the punching out over a number of days.

PATTERNS

The four patterns shown on the opposite page were developed by Ken, our project designer, after he browsed through some quilt design books. (For information on receiving full-size copies of these patterns and the tin, see page 24.)

The two easiest designs ("Fruit Basket" and "Daisy Swirl") only have one size hole and should take about 20 minutes per panel to punch. "Reflecting Hearts" is a little more difficult since it has more holes and two different size holes. It took me about 35 minutes to punch that design.

Since you punch right through the paper pattern and destroy it, you will need a new copy of the pattern each time you punch a new panel (six copies for the pie safe). If you design your own pattern, photocopies can be made from an original.

SETTING UP

After getting the patterns, the next step is fastening them to the tin.

PATTERN TO TIN. Start by aligning the pattern with the top edge of the tin and center it on the length. Then tape it down with masking tape, see Fig. 1. Since the 10" x 12" pattern is smaller than the 10" x 14" tin, there will be a 1" border of waste on the sides to practice punching.

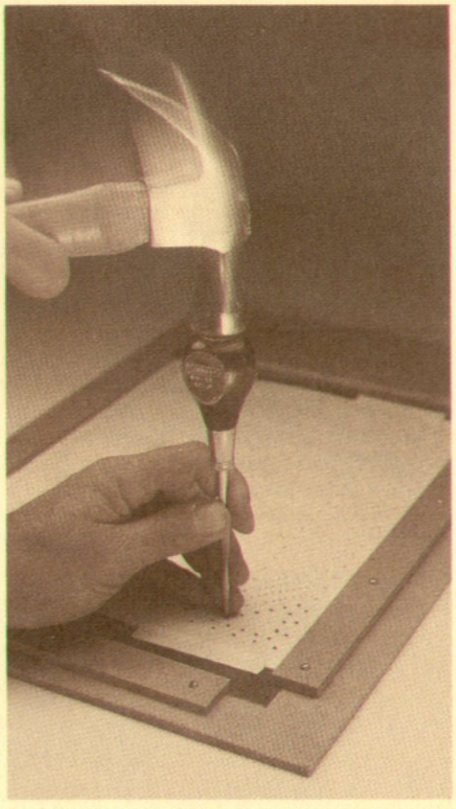

BACKING BOARD. The next step is to fasten the tin to a backing board. To keep from punching into existing holes, I used a new backing board for each panel that I punched.

I tried using both plywood and Masonite (hardboard) as backing boards. As you punch into plywood, the tin seems to grab the plywood and stay flat. But I preferred using the ¼" Masonite. Since Masonite is harder and more consistent than plywood, it's easier to control the depth of the punches. That's important on a design that has two different size holes. I cut the ¼" Masonite to 12" x 16", see Fig. 2.

KEEPER STRIPS. To keep the tin from curling or moving while you punch through it, screw a ¼" x 1" keeper strip along each side, see Fig. 2.

PUNCHING

Once the tin is fastened to the backing board, you're ready to start punching.

PUNCHING TOOL. What's the best tool for punching? I tried some metal center punches, but the point angle was too flat to pierce the tin, see Fig. 3. I also tried a scratch awl that was uniformly tapered down its entire length. It punched the small holes, but I couldn't drive it deep enough into the backing board to make the large holes.

To punch the tin for the pie safe, I used a Stanley scratch awl. It has a thick shaft that tapers quickly down to a point starting about 3/16" from the end, see Fig. 3. That's the best shape for punching various size holes. An old nail set could also be ground down to this shape on a grinder.

To make the punching as easy as possible, sharpen your punching tool by spinning it against a grinder or honing it sharp on a stone. The point doesn't have to be perfectly centered, but it should be sharp enough to easily pierce the tin.

PRACTICE. After the tool is sharp, practice punching in the border areas until you develop a technique that will consistently give you the correct size holes. The more complicated patterns have two different size holes, see Fig. 4. The larger holes should be about 3/32" in diameter. The

FIGURE 1

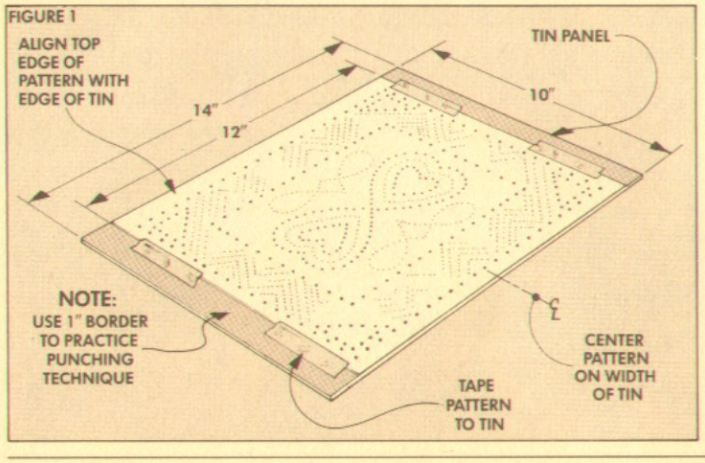

FIGURE 2

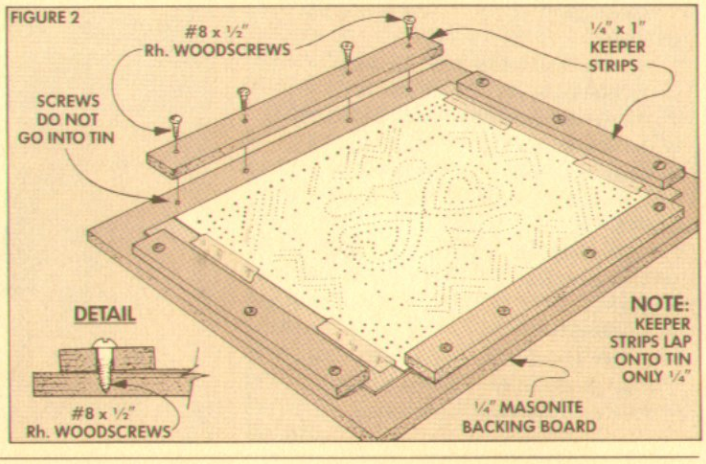

smaller holes should be about 1/32" in diameter. If the pattern has only one size hole, 1/16" is about right.

SMALL HOLES. To punch the smaller holes, grip the shaft of the awl with one hand and hold the point on the center of the dot in the pattern. Then choke half way up the hammer handle with the other hand. (Note: I used a 16 oz. claw hammer.)

Now raise the hammer about six inches above the awl and drop it onto the awl. There shouldn't be any muscle behind it. If the awl is sharp enough, the point will pierce the tin and leave a hole about 1/32" in diameter, see Detail A in Fig. 4.

LARGE HOLES. To produce the larger 3/32"-dia. holes (Detail B), you have to give the awl a firm blow with the hammer. It's about like setting a nail with a nail set.

The trick in punching both size holes is developing some consistency. Before you actually punch out the pattern, practice in the waste area until you can punch holes of a fairly consistent size (either large or small). Don't worry if your holes vary a little bit. It adds to the character of the piece if the holes vary slightly.

FLATTEN THE TIN. After all the holes are punched, remove the tin from the backing board and carefully flatten out any large, rolling bumps with your fingers. Don't cut off the borders yet. The borders serve as "handles" when you age the tin.

AGING THE TIN

As it comes, the tin looks too new and shiny to fit into the antiqued look of the pie safe. To develop an "aged" appearance, the tin has to oxidize.

WASH THE TIN. The first step in this process is to wash off any fingerprints or dirt with dishwashing detergent and a rag.

SOAKING TANK. Next, I made a soaking tank from 1x3's and a plastic garbage bag, see Fig. 5. Then I soaked the panels (two at a time) in a gallon of white vinegar.

To keep the tin panels from touching each other or the bottom, separate them with scraps of wood, see Cross Section in Fig. 5. If the wood floats the panels, add some weight, but make sure the weight and spacers only touch the waste area.

One more thing. The face side of the tin should face up in the tank. As the tin oxidizes, bubbles develop and float up under the bottom side leaving a blotchy surface.

RINSE. After the tin has soaked overnight, lift it out of the tank by the waste borders. Immediately rinse off the entire panel under running water, wiping off any residue with a soft rag.

Then dry it immediately with a hair dryer or fan. If water is allowed to sit on the tin, water spots will quickly develop.

CUT TO SIZE. Once the panel is dry, cut off the waste borders with a pair of tin snips so the panel will fit the opening and the design is centered.

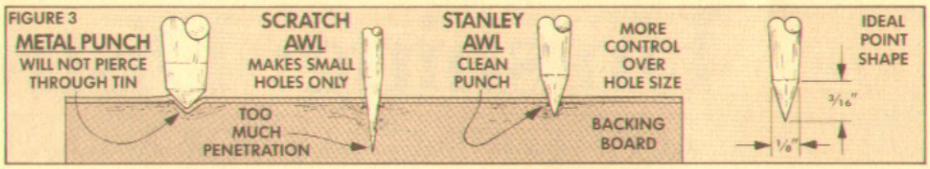

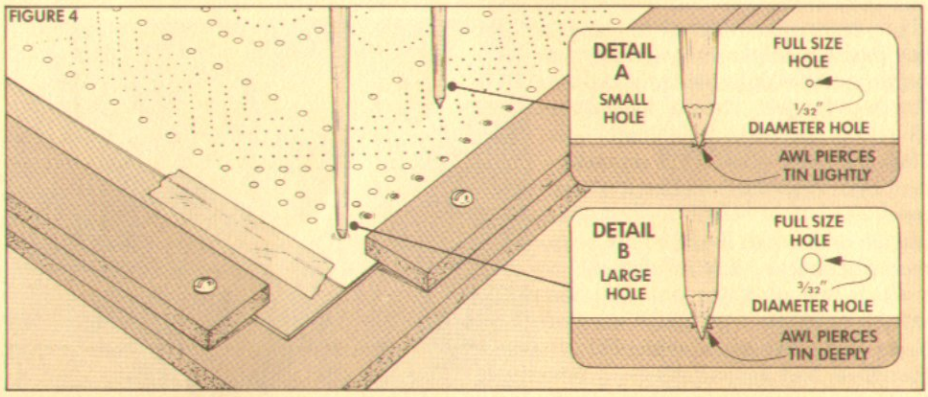

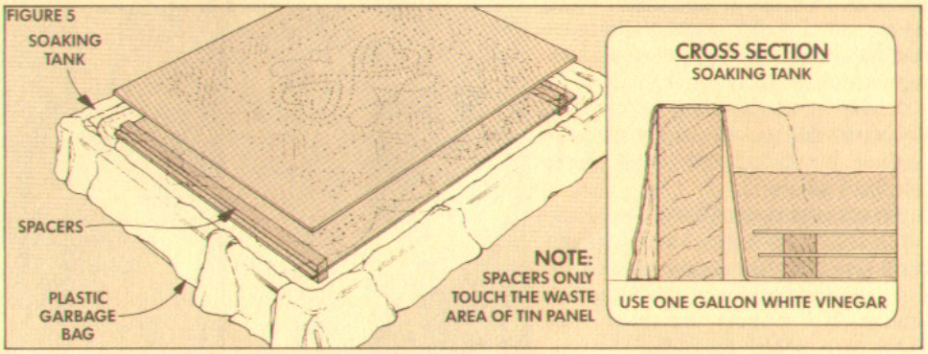

PATTERN CHOICES

HEARTS ON A BLANKET

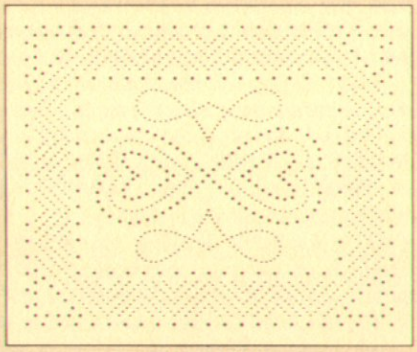

REFLECTING HEARTS

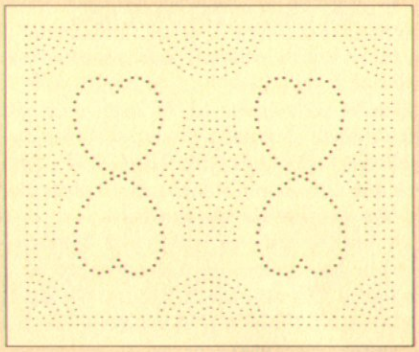

FRUIT BASKET

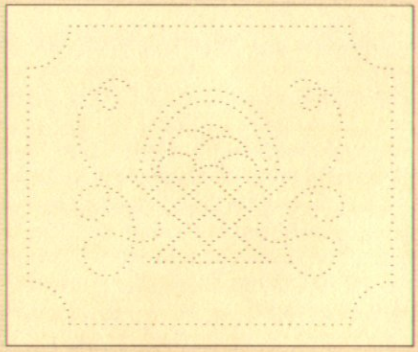

DAISY SWIRL

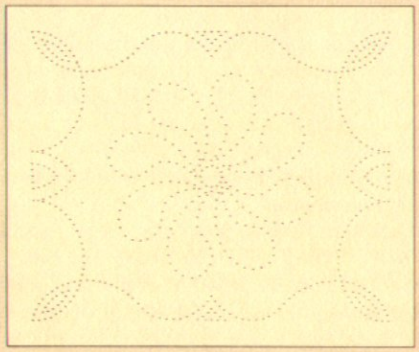

Finishing: Distressing

ACCELERATING TIME FOR AN ANTIQUE LOOK

Even before we started designing the pie safe shown on page 12, we began questioning exactly what the finished project should look like. Should it appear to be a brand new 1860 pie safe? (That is, a reproduction.) Or, should it look like it's been used for more than a century? Maybe it should it look like it's been recently stripped and refinished?

Each one of these has its own unique qualities. I decided I wanted it to look 100 years old, but as though it had a good life — a few nicks and rounded-over edges from wear. But I didn't want to distress it with a chain or pull it up and down a gravel driveway.

I also wanted to apply a finish (varnish) that would offer some protection for its second (oops, first) hundred years.

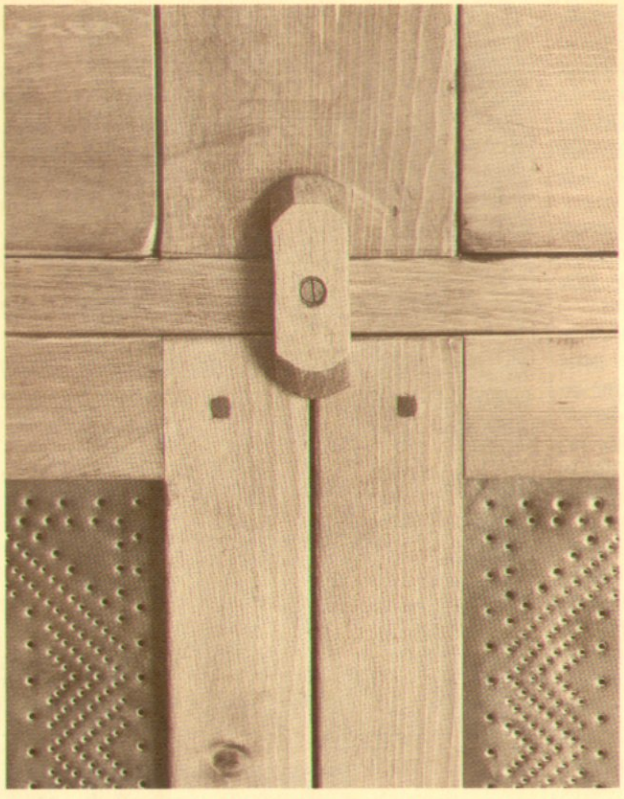

THREE-STEP PROCESS. The complete process of "aging" a project can be divided into three steps: distressing, coloring (staining), and final finishing. It's usually assumed that these three steps start *after* the project is built. But in the case of the pie safe (and most projects) there are a number of steps that should be done while you're building it.

WORK UNDER CONSTRUCTION

One place where you can add years *while* you build a project is on the joints. When I assemble a mortise and tenon joint on most projects, I usually glue and clamp the two pieces together tight. Then, if the two parts are the same thickness, I plane or sand the faces perfectly flush.

Not on the pie safe. After a hundred years the two pieces would probably be a little loose. There might be a gap between the pieces, and they might not be perfectly flush across the faces.

CREATING A "GAP." I wanted a strong joint, but the appearance of a gap. To do this, sand a *slight* round on the edges of the two matching pieces, before assembling the pieces. Don't overdo it. Just hold a piece of 120 grit sandpaper in your hand (not on a block) and break the edges. This creates enough of a shadow line to look like a gap, see photo.

Then don't try to sand the faces flush. It's okay if they aren't perfectly aligned.

PEG THE JOINT. After the mortise and tenon joints were glued-up, I drove a square peg through each joint. (For an explanation of this process, see page 22.)

MITER JOINTS. Mortise and tenon joints aren't the only joints that should be "less than perfect" in appearance. I've never seen a miter hold completely tight on a 100 year old antique. They always open up.

When cutting miters, don't intentionally set the miter gauge at 44° or 46°, but you don't have to be quite as careful about double checking the gauge. Then, when assembling the joint, don't worry so much about clamping it perfectly tight.

BACK BOARDS. Another thing I've noticed about old pine cabinets is that the back faces of the back boards are rarely planed smooth. They're usually heavy with swirled sawmarks because the wood had to be planed by hand, but wasn't — why waste the effort on the back?

You can get this effect on the back boards of the pie safe by resawing them with a "bad" rip blade. To do this, find that rusty, old steel saw blade (or buy a cheap one) and bend ("set") one tooth to the side by hitting it with a hammer.

Then, move the rip fence so the workpiece is between the fence and the "set" tooth, and move the fence in to trim about 1/32" off the thickness of the stock to produce swirl marks.

SANDING. As I worked on the pie safe, I took a little different approach to sanding. Usually, I sand all the flat surfaces of a project with an orbital palm sander and then hand sand them with a block. The flat bottom on the sander and block helps bridge over any low spots and you end up with a flat surface.

On the pie safe, it isn't critical that the surface be perfectly flat. Just the opposite. A low spot here or there adds to the character of the surface. So I sanded by hand (no block) to follow the contours of the surface.

Also, round all the corners and edges by hand so it looks like there has been some natural wear. This is easiest to do *before* assembly.

STAINING PANELS. There is one more step I do *before assembly* — seal and stain any panels that will be in frames (such as the side panels on the pie safe). If you don't, and the panel should dry out and shrink, there will be a line around the outside of the panel without stain.

DISTRESSING

After the project is assembled, some further physical distressing can be done. This is where you have to be careful. At first there's a tendency to be cautious, especially on a project you've spent so much time on.

Once you get started, though, it's easy to get carried away and beat the entire project with any tool that's handy.

WHAT'S ITS HISTORY? This is the time when some thought (and fun) goes into the project. Ask yourself what kind of wear this piece of furniture might show after 100 years. The pie safe, for example, would probably show some wear on the legs after years of brooms bumping against them. Get out a rasp and round the legs a little.

Maybe a dog has chewed the pie safe along the bottom. Scratch the legs with some 60 grit sandpaper. But don't scratch the top with the sandpaper. How would Rover get up there?

Consider the piece and its uses. For example, the top of a writing desk might have a circular ink spot, but it wouldn't be very appropriate for the top of the pie safe. A kitchen table might show a burn from a hot pot, but a writing desk wouldn't.

LOWER SECTIONS. In general, try to do the majority of the rounding, gouging, and scratching on the legs, feet, chair rungs, or bottom third of any project. That's where there's generally wear on a well-used piece of furniture.

WORMHOLES. As for wormholes, I don't think you can accurately duplicate the winding path of most worms. If you want to try, though, bend some fine wire into a wavy pattern. Then lay it down on the wood and tap it with a hammer until an impression is left.

A LITTLE DIRT. There are a couple more steps I did on the pie safe before applying the finish. I set all the nails *slightly* below the surface of the wood. The stain soaks in around the nail and looks like a natural build-up of dirt.

Finally, to further give it a slightly dirty, aged appearance, I rubbed a little rottenstone into the gouges and nail holes, around the knobs and turnbuckles, and along some of the edges. Rottenstone was handy. It's a very fine powder I use for rubbing down finishes. Fine, dry dirt also works.

Note: A little dirt or rottenstone mixed with wax can also be rubbed into these spots *after* the project is finished. Don't do this before staining though — the wax will seal out the stain.

HOW MUCH IS TOO MUCH? Don't overdo the physical distressing. Take a good look at the way old pine furniture looks, then try to duplicate it. It's a fine line, but too much distressing can look phony.

SEALING AND STAINING

After the pie safe is distressed, the next step is to add some color by staining.

SEALER. Before staining pine, I usually seal it. Pine (along with maple and birch) has an uneven grain pattern that soaks up stain unevenly and creates a blotchy appearance if it's not sealed. A sealer tends to even out the stain penetration.

On the pie safe, I used a "Stain Controller" made by McCloskey's, see Sources, page 24. Minwax also makes a sealer for softwoods called "Wood Conditioner". In the past I've often used a thinned down coat of varnish as a sealer or "wash coat." (For more information, see *Woodsmith* No. 39.)

No matter what sealer you use, make sure you cover the entire project. Put a couple coats on any end grain to keep it from soaking up the stain and getting dark.

NATURAL COLOR. The biggest problem I had finishing the pie safe was finding the color of stain I wanted — a warm, transparent, honey color that lets you look down into the grain of the wood. To be perfectly honest, I don't think it's possible to accurately duplicate the color wood naturally takes on through the years.

Wood develops a distinctive "patina" all its own. It's a combination of years of exposure to light, air, dirt, grease, furniture polish, and wax. It's not the kind of thing you can find in a can.

The best you can do is try to find a tone that's somewhat similar. Usually this means choosing a commercially-prepared stain or dye. (For more on stains and dyes, see *Woodsmith* No. 40.)

HOMEMADE STAIN. For the pie safe, I tried something different and made my own stain. The basic recipe is shown in the box below, but the fun part was developing the color.

The color can be made by mixing combinations of artist's oil colors (available in toothpaste-style tubes at art supply stores, see page 24) or Japan colors (available at paint and woodworking stores).

FOUR BASIC COLORS. I usually start with four basic colors: burnt umber (brown), raw sienna (light brown), burnt sienna (reddish brown) and a yellow. Yellow ochre is mustard yellow, Naples yellow is canary yellow, and Hansa yellow is bright yellow.

EXPERIMENT. It takes some experimentation to develop the exact color you want. Start by dissolving a small dab of each color into 2 tablespoons of mineral spirits and one tablespoon of boiled linseed oil. Then wipe the mixture on a scrap of wood from your project. You will see that the color of the mixed liquid and the color of the wood after it's applied are very different.

The whole process of developing the right color is trial and error. If the color isn't dark enough, add more burnt umber. If it's too dark, decrease it. I thought the pie safe should have a yellow-brown tone with a touch of red. So I started with a combination of burnt umber and Hansa yellow. Then I introduced burnt sienna, but it became too red so I changed to raw sienna. I finally found the tone I was looking for: 1 part Hansa yellow, 1 part raw sienna and 3 parts burnt umber.

Since it's difficult to mix the *exact* same tone twice, once it's developed and tested, mix up enough to stain the entire project. A quart should be enough for the pie safe (see recipe box below).

APPLYING THE STAIN. I brushed on a coat of stain with a disposable brush and let it dry for a couple hours. Then I applied a second coat to any boards that seemed light. Before the stain dries, take a rag and wipe off some of the stain around any natural wear spots — around knobs and the turnbuckle, along the door stiles, and the top front edge.

VARNISH

After the stain dries overnight, the top coat can be applied. The choice of a top coat for the pie safe came down to an oil or a varnish. Much of the country pine furniture (both antiques and modern copies) don't have a top finish on them, or if they do, it's linseed oil. Sometimes you will find a piece of pine furniture with a heavy coat of varnish. That's usually a sign that it has been stripped and refinished.

For the pie safe, I wanted more surface protection than an oil would provide, but still maintain a flat (non-glossy) look. To obtain this, I used two coats of McCloskey's Heirloom (eggshell finish) Varnish.

STEEL WOOL. If the varnish is too glossy, there's an easy way to control the sheen. After it has dried overnight, rub down the entire surface with "0" steel wool until it's uniformly flat in appearance.

FINAL THOUGHTS

In looking back on the whole process of building, distressing, and finishing the pie safe, two things come to mind. First, a project like this is fun to build because you don't have to be quite so careful. A few dings, dents, gouges, and chips just add to the character of the project.

Second, it was a challenge to try to determine the right characteristics that would add years to the project. It was like walking through a hundred years of time in a few days.

Country Pine

- ⅓ of a 1.25 fl. oz. tube of Hansa Yellow Medium (#222) Oil Color*
- ⅓ of a 1.25 fl. oz. tube of Raw Sienna (#330) Oil Color*
- 1 complete 1.25 fl. oz. tube of Burnt Umber (#128) Oil Color*
- 2½ cups Mineral Spirits
- 1½ cups Boiled Linseed Oil
- 2 tablespoons varnish (Not polyurethane)

Mix three oil colors together thoroughly. Then add mineral spirits and boiled linseed oil to mixture. Stir until all of the oil colors are dissolved. Add varnish as binder to hold the pigments to the wood when the mineral spirits evaporate. —— Yield: 1 quart stain.

*We used Liquitex brand Artist Oil Colors, see Sources, page 24. You also could use Japan Colors. Note: Not all oil colors are exactly the same. Grumbacher's Burnt Umber, for example, gives the color a slightly greenish tone.

Talking Shop

SOME TIPS FROM OUR SHOP

A POOR MAN'S PLANER

Two of the projects in this issue call for ½" and ⅜"-thick pine. Finding pine (or any wood) in these thicknesses at a local lumberyard can be a challenge.

If you can't find these thicknesses, you have a couple of options. You can buy ¾" stock and then run it through a planer. Unfortunately, not all of us have planers or easy access to one. Another solution would be to resaw it on the band saw.

TABLE SAW METHODS. I used a couple different table saw methods to cut the thin stock for the projects in this issue. For the letter box, I needed some stock that was ⅜" thick by 5¼" wide. To resaw ¾" pine to this thickness, I stood the piece on edge, raised the table saw blade until it was about half the width of the workpiece, and cut a deep kerf (see Fig. 2 on page 5).

Then I turned the piece over and cut almost to the center from the other edge. From there you can cut it through with a hand saw and plane off the small ridge.

WIDER PANELS. That method works fine for narrow pieces, but the center ridge can become wide if the workpiece is wider than about 6½". That's because the maximum height that a 10"-diameter blade can raise above the table saw is about 3¼".

On wider pieces, such as the side panels for the pie safe, I used a dado blade to "plane down" the stock.

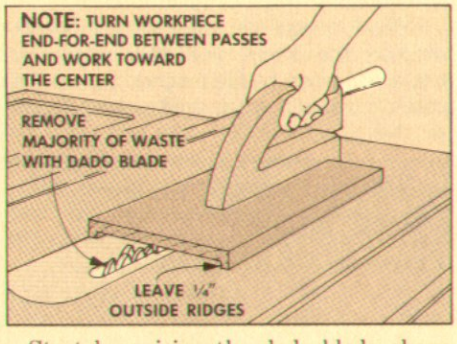

Start by raising the dado blade above the table to an amount that's a hair less than the waste you want to remove from the piece. (This leaves the workpiece a little thick to allow for hand planing or sanding afterwards.)

Once the dado blade is at the correct height, make a series of passes over the blade to remove the majority of the waste. Start about ¼" from the edges and work toward the center.

The object of all this is to create a platform-shaped piece with ridges along the edges and a very narrow ridge in the center. The ridge in the center supports the piece so it won't bow if push stick pressure is applied to the top.

Caution: The only problem I've ever had using this method was if the workpiece was so wide that the outside ridge fell down into the miter gauge slot. As long as the board is supported by the inside ridge and the center ridge, this isn't a problem.

CUT OFF LEGS. After the wide grooves are complete, switch to a regular saw blade. Then stand the workpiece on edge with the rip fence ½" (or the desired thickness) away from the blade and trim off the outside ridges, see left view in drawing.

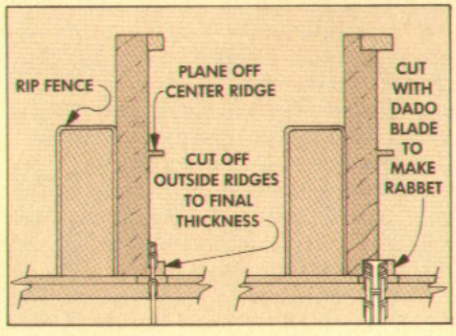

If you want a panel with a tongue (such as on the pie safe side panels), there's no need to switch to a standard blade. Just leave the dado blade on the saw and set the fence so the distance from the fence to the blade equals the thickness of the tongue. Then raise the dado blade up until the height above the table equals the length of the tongue. One pass through the saw removes the outside ridge and cuts a rabbet to leave a tongue, see right view.

REMOVE CENTER RIDGE. Finally, I use a hand plane to remove the center ridge and smooth off the saw blade marks.

SQUARE PEGS

On the pie safe, I added a square peg through each of the mortise and tenon joints. Today's glues are strong enough that this isn't necessary, but it made the project a little more authentic. In the 19th century, the glue was of such poor quality that the joint needed more support — a peg or two to hold it together.

Why square pegs rather than round dowels? Commercially-made dowels were not commonly available until the second half of the 19th century. Before then it was quicker to make square pegs than turn round ones. But there's another reason for the square pegs. When square pegs are driven into a round hole, the corners wedge in tight and hold.

START WITH A STICK. To make the square pegs, I started with a length of ¼" x ¼" pine. Then, to make it easier to start into a round hole, I whittled the last ¼" round with a pocket knife.

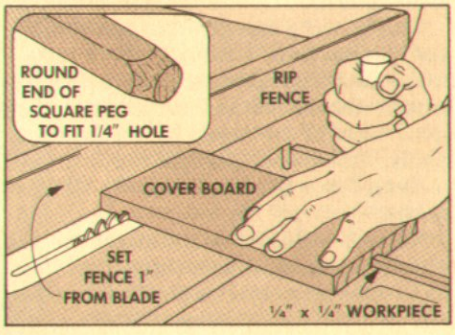

Note: Whittling was fine for one peg, but when I realized I needed 38 pegs for the pie safe, my 20th century pencil sharpener was put to use to round the ends.

CUT PEGS TO LENGTH. Once the end is rounded, there's an easy way to cut pegs to the same length on the table saw. (For the pie safe, I cut the pegs about 1" long.) First, cut a ¼" x ¼" groove in a piece of scrap to use as a cover board.

Next, raise the blade about ⅜" high and lock down the rip fence so the distance between the fence and the blade equals the peg length. Now, with the groove in the cover board facing down, slide the square stick in until the rounded end hits the fence and then cut off a peg.

PEG HOLES. After the pegs are cut, drill ¼" holes through the joint. Center the hole on the mortise and drill it deep enough to go completely through the mortise and tenon, but not out the back side.

Once the holes are drilled, put a little glue on the end of the peg, position it in the hole so one edge runs parallel to the joint line, and tap it home.

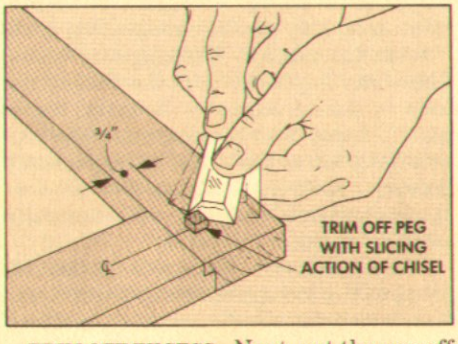

TRIM OFF EXCESS. Next, cut the peg off about ⅛" from the surface with a hand saw and trim it off flush with a sharp chisel. To get a clean cut, use a slicing action.

Talking Shop

AN OPEN FORUM FOR COMMENTS AND QUESTIONS

BUYING PINE

We built all the projects in this issue out of pine — a wood that's widely available but presents some problems not usually found with cabinet hardwoods.

THICKNESS. First, the good news. The thickness of pine is much more standard than hardwood. If you asked for dry 4/4 *hardwood* at your lumberyard, you would actually receive stock that's anywhere from ¾" to 13/16" thick — after it's been dried and planed smooth. (Note: 4/4 is the designation for hardwood lumber that's 1" thick when it's rough. This is sometimes called the "nominal" size, while ¾" or 13/16" is the "actual" size.)

Although the National Hardwood Lumber Association guidelines call for 4/4 hardwood to be 13/16" (see chart below), local mills and retailers may actually plane it to ¾", 25/32", or 13/16".

Since pine is commonly used in building construction, the thicknesses are more standard. If you ask for "1 by" material (such as a 1x6 or 1x8), it should measure ¾" thick, see chart. The stock was sawed off the log at 1" thick, but actually measures ¾" after drying and planing.

WIDTHS. The widths of softwood are also standard. A 1x6 should actually measure 5½" wide if you buy it in Des Moines or San Diego.

The width measurements are always a little confusing, see chart. If the board is 6" or *less* in width, the actual measurement will be ½" less than the nominal measurement. If the board is *greater* than 6" in width, the actual measurement will be ¾" *less* than the nominal measurement.

GRADES. Now the bad news. Grades of pine are a lot more complicated than hardwood grades. Since the 1920's the U.S. Department of Commerce has worked with lumber manufacturers to set up voluntary American Softwood Standards (PS 20-70).

The standards are basic references, but there are at least four major associations of pine manufacturers in the United States who interpret them to meet their needs. Each association represents a different part of the country and different species of pine grown in its area. So each association sets grade rules to fit its products.

Add to this the fact that there are at least twelve species of pine commonly available (not including the spruces and the firs) and things can get confusing.

CONSTRUCTION LUMBER. The softwood lumber 2" thick (1½" actual) and thicker used in construction is usually called "structural" or "construction" grade. Construction lumber isn't intended for furniture.

GENERAL PURPOSE PINE. We picked up some ¾"-thick pine for our projects. This is often called "yard lumber" at local lumberyards or "shop grade" if it's supplied to industrial manufacturers.

This is where things start getting confusing. Yard lumber can be further broken down into "select" (sometimes called finish) and "common" (sometimes called standard or construction).

HOW TO ORDER. What does all this actually mean when you order pine at your local lumberyard? If you want pine that has few knots or defects, order a *select* grade. The select grades start at A (the best, but not readily available) and go through D (the lowest select grade). There's also combinations such as C and Better (C&BTR) that might include both C and B grades.

COMMON GRADE. If you don't mind a few knots or defects, order a *common* grade. The common grades are numbered: No. 1 (the best) to No. 5 (the worst). For the pie safe, we thought the knots gave the project character and used a common grade (No. 2) for all of the parts except the side panels where we specified C&BTR select.

One caution: Common grades have more defects than select grades and are likely to have some warp. So, you should figure in more waste when using a common grade.

There's another thing to consider when choosing a grade. The wood is usually first graded at the sawmill or kiln and the worst board in one grade may be very close to the best board in the next lower grade. Unless the board is clearly stamped, by the time it goes through a number of hands and gets shelved at a lumberyard, there may be considerable mixing of grades.

One dealer may pull out what *he* considers to be all the bad (or good) boards and restack them together. You usually can get the best quality for your dollar if *you* pick through the piles and choose your own boards. To do this, try visiting the lumberyard on a weekday when it isn't as busy. Then, be sure to assure them you will neatly restack their piles.

AVAILABILITY. I phoned five local lumberyards and found most carried one select grade (C or D&BTR) and two common grades (No. 2 and No. 3). From my experience, I would say this selection is fairly typical of most retail lumberyards.

COST. Locally, the price for a 6 foot long board of 1x6 pine (3 board feet) in the select grade ranged from $3.59 to $9.85. (A select oak board this size costs about $7.20. So select grade pine can often cost as much or more than hardwood.) In No. 2 common, the same size board ranged from $1.99 to $2.40 and for No. 3 common about $1.20.

DRYING PINE. One other thing should be mentioned about buying pine. Be sure it's kiln-dried. However, even kiln-dried pine is usually only dried down to 12-15% moisture content and then sometimes it's stored outdoors. (Hardwood lumber is usually dried down to 6-9%). If you are building indoor furniture, it's best to use wood that has dried down under 10%.

With this in mind, whenever we use pine at *Woodsmith* we bring it into our heated shop and let it stand for at least a week before we cut it. It's best to spread the pieces out and stand them on end or stack them with scrap wood ("stickers") between them for maximum air flow.

Most warp will become obvious after it's exposed to dry heat for a week. Then you can decide how to cut it to fit your needs.

THICKNESS STANDARDS

SOFTWOOD			HARDWOOD		
NOMINAL		ACTUAL*	NOMINAL		ACTUAL*
1"	ONE BY	¾"	4/4	FOUR QUARTER	13/16"
THICKNESSES BETWEEN 1" AND 2" ARE NOT COMMONLY AVAILABLE			5/4	FIVE QUARTER	1 1/16"
			6/4	SIX QUARTER	1 5/16"
2"	TWO BY	1½"	8/4		1¾"
3"	THREE BY	2½"	12/4**		2¾"
4"	FOUR BY	3½"	16/4**		3¾"

* MEASURED THICKNESS AFTER DRYING AND SURFACING (HARDWOOD FOLLOWS NHLA GUIDELINES)
** NOT AVALABLE IN SOME SPECIES

WIDTH STANDARDS (SOFTWOODS)

NOMINAL	ACTUAL*
2"	1½"
4"	3½"
6"	5½"
8"	7¼"
10"	9¼"
12"	11¼"

* MEASURED WIDTH AFTER RIPPING EDGES STRAIGHT

Sources

LETTER BOX

The only piece of hardware needed for the letter box is a ¾"-dia. wooden knob. Any ¾"-dia. knob would work. One source is:

THE WOODWORKERS' STORE, 21801 Industrial Boulevard, Rogers, MN 55374; 612-428-2199 (Catalog: $2.00. Note: $15 minimum order.) *Shaker Knob*, birch, ¾" dia., ⅝" proj., ⅜" tenon dia., Order No. E4300, 40¢ each or $3.60 per 10.

WALL SHELF

The only extra parts needed for the wall shelf are the eight 3½"-long Shaker Pegs. Shaker Pegs are available from many retail (craft) stores and woodworking catalogs. The Woodworkers' Store (listed above) has these pegs. Another mail order source would be:

MEISEL HARDWARE SPECIALTIES, P.O. Box 258, Mound, MN 55364; 800-441-9870 (Note: $25 minimum order. Catalog $1.00). *Shaker Pegs*, birch, 3½" long, ½" tenon dia., Order No. SKP1, 28¢ each.

PIE SAFE

We're offering the patterns, tin, and hardware for the pie safe in kit form (see box at right). If you prefer, you can order the tin and square nails separately:

TIN. We've located two different sources for the tin panels:

COUNTRY ACCENTS, P.O. Box 437, Montoursville, PA 17754; 717-478-4127 (Catalog: $3.00. Free with order.) Order *Black Tin* 10" x 14", $1.75 per sheet. $3.00 shipping/handling for orders under $30.

SPECIALTY MANUFACTURING CO., P.O. Box 1235, St. Charles, MO 63301. (Note: No phone orders. Mail order only. Minimum order: $10.00) Order *T2200 Tin*, 10" x 14", $1.85 per sheet. $2.50 shipping and handling charge.

SQUARE NAILS. Though they're often called square nails, these nails are really rectangular in shape. You can order the 4d (1½"-long) fine finish nails (and a wide variety of other sizes and styles) from:

TREMONT NAIL COMPANY, Dept. WP, P.O. Box 111, Wareham, MA 02571; 617-295-0038 (Catalog: Free. Note: Price below does not include shipping and handling. They do not accept credit card orders. Send in your order and you will be billed.) *Fine Finish Steel Cut Nails*, 4d (1½"), Order No. N-19 Std, 4d, $2.14 per pound.

HINGES. Almost any butt hinge you buy at a local hardware store will work for the doors. (Six are needed.) The hinges we bought were Stanley No. 838 *unplated* steel hinges. They are 2" long and 1½" open width and cost about $1.45 a pair.

While you're soaking the tin in the vinegar (see page 19), throw in your hinges and the turnbuckle screw. It will add about 100 years to their appearance.

KNOBS. You will need four 1¼" wood knobs for the drawers and doors. They cost about 23¢ each at a local hardware store.

STANLEY AWL. As explained in the article on tin punching (page 18), we used a Stanley awl to punch the tin. The important thing is the shape rather than the tool. You could also grind a nail set to this shape.

We used a Stanley awl number 69-122 that cost $3.99 at the local hardware store.

DISTRESSING/FINISHING

In the article about distressing and finishing on pages 20-21 we mentioned that we mixed our own stain with artist's oil colors (don't use acrylics). There are two major brands of oil colors: Grumbacher and Liquitex. These are available at most art supply stores. Artist's oil colors are also available from Van Dyke's woodworking and restoration supply catalog:

VAN DYKE SUPPLY CO., Box 278, Woonsocket, SD 57385; 800-843-3320 for orders. (Note: $2.00 handling charge on all orders less than $10.) *Oil Colors*, 1" x 4" studio size tube, 64 colors (see catalog), Order No. R6144, prices range from $2.15 to $5.10.

On the pie safe, we applied a coat of McCloskey's Stain Controller to prevent "blotchy" penetration of the stain. After the stain was applied, we finished it with two coats of McCloskey's Heirloom Clear Varnish (Eggshell finish). We bought the Stain Controller for $5.39 a quart and the Varnish for $6.99 a quart at a local home center. They also are available mail order from:

THE WOODWORKERS' STORE (address above). *McCloskey's Stain Controller and Wood Sealer*, Order No. P1241, $5.95 per pt., $8.95 per qt. *McCloskey's Heirloom Varnish*, Eggshell, Order No. P1252, $8.35 per pt., $13.65 per qt.

WOODSMITH KITS

We've received a number of letters recently asking if the hardware kits that were offered in past issues of *Woodsmith* are still available. Yes they are.

It's been fun for us to send out kits and then get photos back of finished roadsters, kaleidoscopes, and lingerie dressers.

As the number of kits we offer has grown, we've had to reorganize our storage, handling, and shipping facilities. We've called on Leslie Gearhart to supervise all of this, and we think she will offer excellent service to customers.

To order a kit, write your order on a piece of paper and send it with your name, address, and payment to Woodsmith Kits, P.O. Box 10350, Des Moines, IA 50306. Please allow 4 to 6 weeks for delivery.

All prices include shipping and handling. Prices are good through Dec., 1988. (Iowa residents add 4% sales tax.) For details on the contents of the kits, and instructions for the projects, see the specific issue.

CLASSIC ROADSTER KIT (Issue No. 51). Kit 51A (Parts only), $5.95. Kit 51B (Parts and Wood), $16.95.

KALEIDOSCOPE KIT (Issue No. 52). Lens and Rings. Order No. 52A, $12.95.

SALT/PEPPER SHAKER PLUGS (Issue No. 52). Six plastic plugs. Order No. 52C, $1.00 plus stamped envelope.

LINGERIE DRESSER KIT (Issue No. 53). Hardware and drawer glide strips. Order No. 53A, $29.95.

MICROWAVE CART KIT (Issue No. 54). Hardware/casters. Order No. 54A, $24.95.

DRILL PRESS CABINET KIT (Issue No. 54). Hardware and drawer slides. Order No. 54B, $24.95.

PIE SAFE KITS

Woodsmith is offering three kits of patterns and hardware for the pie safe:

KIT 55A ($2.95) includes:

- (6) paper copies of one tin panel design. (Specify which design you want, see below.)
- (1) full-size paper pattern of the bottom leg profile.

KIT 55B ($15.95) includes Kit 55A plus:

- (6) pieces of tin, 10" x 14".

KIT 55C ($23.95) includes everything in Kits 55A and 55B plus:

- One pound of 4d (1½" long) fine finish square nails.
- (3 pair) Stanley No. 838 unplated steel hinges, 2" long, ½" open width.
- (4) 1¼"-dia. wooden knobs.

The total prices listed above include postage and handling. (Iowa residents add 4% sales tax.) Prices good through Dec., 1988.

To order a kit, just write your order and your name and address on a piece of paper. Be sure to specify which kit you want (55A, 55B, or 55C) and which of the following designs you want (see page 19): Hearts on a Blanket (as shown on our pie safe), Reflecting Hearts, Fruit Basket, or Daisy Swirl. (If you don't specify, Hearts on a Blanket will be sent.)

Send your order and payment (no charge cards or phone orders, please) to: Pie Safe Kit #55A (or #55B, or #55C), P.O. Box 10350, Des Moines, IA 50306. Please allow 4 to 6 weeks for delivery.

Index of Contents No. 1-54

This index covers all of the articles (including projects and techniques) that have been featured in the first 54 issues of *Woodsmith*.

We've divided this index into two sections. The first section is a general catalog of woodworking topics, tips, tools, joinery, jigs, and finishes. The next section is a list of all the projects shown in the first 54 issues of *Woodsmith*.

The numbers following each listing refer to the issue and pages where you can find information on the listed subject. For example, 47:4-9 refers to information in *Woodsmith* No. 47 on pages 4-9.

GENERAL INDEX

Adhesives
- Hide (Scotch) 19:23
- Hot melt 34:24; 43:3
- Outdoor 45:14-15,24
- Waterproof 3:7, 11; 16:10; 27:8

Adjusting
- Band saw 51:16-18
- Radial arm saw 51:22
- Table saw 51:20-21

Alcohol, Denatured 53:20-21
Alcohol soluble dyes 40:21-22,24
Alignment
- Band saw blade 51:16-18; 52:23

Angle
- Cutting odd 20:23; 45:17
- Drilling 4:10; 35:22
- Sharpening 46:18-19

Angled box joint 35:15
Angled half-lap joint 39:4
Angled mortise and tenon 48:2,8-9
Arched-top frame and panel 48:4-21
Artists' oils 39:22,24; 40:23
Band saw
- Alignment 51:16-18
- Bimetal blades 51:23; 52:23
- Blade 10:3; 43:19; 51:16-17, 23
- Blade set 51:16-17
- Blade tension 51:16-17
- Cutting cabriole legs 43:4-6,19
- Cutting circles 51:11, 19; 52:3, 17
- Cutting duplicates 23:3
- Feed rate 51:16-17
- Pulleys 51:18; 52:23

Bead cutting jig 16:3
Beam compass 38:4; 40:14; 45:19
Belt sander 10:10; 15:7; 35:22
Bench
- Base 50:12-14
- Dogs 50:5, 15, 24
- Height 50:23
- Top, making 50:4-9
- Type of wood 51:23

Bench hook 38:3
Bevel honing guides 47:14-15,24
Bevel/rip 18:3; 25:8-9
Bevel/rip 16 16:8; 18:3
Bits
- Brad point 45:4-5,24

Bits, cont.
- Forstner 40:4-5,24; 48:24
- Mortising 26:20-21,24; 48:24
- Panel raising 40:18-24
- Rabbet 36:21; 38:23
- Router 37:19-21,24
- Spade 52:6, 20-21; 54:22, 23

Blackboard paint 41:24
Blind dado 38:3
Blind dovetail 12:7
Block planes
- Buyer's guide 46:14-15
- Edge trimming 48:3
- Tuning up 46:16-17

Bolts
- Cutting 49:3

Books
- Finishing 38:24; 40:24
- Wood Technology 31:23; 40:24; 45:13-24

Boring jig
- Horizontal 12:13

Box joint 2:4-5; 17:12-13; 35:12-20; 41:8-9; 42:6,10-20; 50:8
- Cleaning up 42:20; 44:3
- Cutting on a router table 42:17,18
- Cutting on a table saw 50:8
- Drawers 17:19; 50:19
- Jig 2:4; 35:14-15; 42:16-17
- Rabbeted 17:19

Box joints
- Doweling 53:3

Bracket
- Wall hanging 53:17

Brad point bits
- Buyer's guide 45:5,24
- Sharpening 45:4

Branding irons 10:3
Brass
- Polishing 49:11, 24

Brushes
- Bristle 43:21; 46:22
- Cleaning 39:3; 53:22
- Foam 46:22

Bullet catch 19:12,17
Burl veneers 44:15
Burns
- Removing from wood 38:21

Cabriole legs 43:4-9
Carbide-tip
- Dado sets 44:20-22
- Router bit 21:8-9; 23:23; 37:19-21
- Table saw blades 27:16-21, 24; 28:23

Carpenter's triangle 1:6
Carpet tape 35:23; 42:3, 24; 51:23
Carver's cradle 43:7, 9, 19
Carving 32:4-6, 24
- Pattern for card holder 35:20
- Pattern for quilt rack 32:24
- Reference books 32:24
- Tools 32:24

Center finder 43:3
Centering
- Table top 49:23

Chemical information 54:23
Chisel 19:5; 20:8-11; 25:3
Chisel sharpening 47:14-15
Circle cutter
- Adjustable 33:18-19

Circles
- Routing 20:13; 21:10-11

Circular saw 50:23
Clamping
- Block, dovetail 32:23
- Blocks on edge 42:3, 19
- Boards 31:3; 35:3
- Corners 34:3
- Long pieces 34:24; 36:3

Clamping, cont.
- Table top 15:7; 17:3

Clamps
- Conduit bar clamp 53:3
- Hand screws 15:7; 28:3
- Hold-down 1:6
- Pipe 15:3, 7; 28:3; 32:15; 36:3
- Wedge 5:3

Cleaning brushes 53:22
Clubs
- Organizational help 37:24
- Woodworking, lists 27:24; 28:24; 29:24; 30:24; 31:24; 32:24; 33:24; 40:24

Color coding tools 37:3
Compass 7:3; 26:3; 38:4; 40:14
Compound miters 36:21
Corner
- Joint, plywood 22:3; 33:20,22
- Template 29:3

Cove cutting 12:16; 20:23; 36:11; 37:23
Cushion 43:13
Cut-off jig
- Radial arm saw 22:3

Cutting small strips 52:3
Dado blades
- Adjustable 17:20; 23:23; 34:22; 44:22, 24
- Buyer's guide 44:20-22, 24
- Problems 42:20

Danish oil finishes 30:12-15; 44:23; 47:3
Decals
- Heat transfer 47:3

Deft clear wood finish 48:22-23, 24
Dentil 26:12-19, 22; 29:3; 31:3; 36:3
Dents 15:3; 38:20
Diamond sharpening stones 24:7; 47:12-13, 24
Door
- Caned-panel 22:18-22
- Glass 13:8-9; 22:18-22; 24:9; 25:19; 26:15-17; 29:19-20; 33:15, 24; 36:14, 16-19; 38:11; 49:9
- Hinges 13:8-9; 25:19; 49:9
- Latch 53:16
- Louvered 37:10-13
- Muntins 13:8-9
- Raised-panel 2:10-11; 18:4-19; 24:14-17
- Solid panel 53:16
- Techniques 13:8-9; 29:20-21; 50:18

Dovetail
- Blind 12:7
- Clamping block 32:23
- Drawers 19:15-18
- Fixtures 22:6-10; 23:3; 27:3; 32:22
- Groove 11:6-7; 49:13
- Groove, stopped 49:14
- Half-blind 22:4-9; 34:4-9
- Hand-cut lap 22:4-5; 23:3
- Hand-cut through 19:6-11
- Key 31:4-9
- *Leigh* dovetail jig 32:22, 24
- Machine-cut lap 22:6-9
- Machine-cut through 32:22
- Rabbeted 21:3
- Routed 22:6-9; 32:22, 24
- Saws 19:5
- Sliding 31:4-11
- Tenons 49:14
- Through 12:7; 19:6-11
- Tongue and groove 9:7; 20:20-22, 24; 31:4-9, 20-22; 38:16; 40:18

Dowel centers 37:18
Doweling jig 41:4, 24
Dowels
- Chamfering 10:3
- Cutting 16:3
- Drilling 33:3; 34:3; 48:3
- Grooved 16:3
- Making 19:3; 39:16-17; 42:3
- Sanding 9:12
- *Shopsmith Mark V* 29:3
- Too tight fit 48:15
- Uses 24:23; 29:16-21; 30:2; 39:5, 9, 15; 41:20-21; 53:3
- With tenons 48:15

Drawer
- Aligning drawer fronts 46:3
- Construction 17:19; 18:20-22; 19:18; 22:6-9; 31:21-22; 32:18-21; 33:16; 34:13-15; 38:10-16; 40:18; 41:8-9; 42:13-14, 18-19; 43:15-17; 44:6; 47:8; 50:19; 53:8-9, 23; 54:19
- Divider system 42:15, 19
- False front 44:6
- Glide strip 53:8
- Hardware 54:19, 24
- Plywood 22:14-15
- Retaining button 53:9
- Routed front 21:3; 40:18
- Runners 47:6; 53:6
- Stops 40:18

Drill bits 32:23; 40:4-5, 24; 45:4-5, 24
- Oversize/undersize 48:3
- Spade bits 52:20-21; 54:22, 23
- Storage 54:22

Drill guide
- *Portalign* 12:13, 3; 48:6

Drill press
- Adjustment wrench 32:3
- Auxiliary table and fence 54:20-21
- Cabinet 54:16-19
- Collet chuck 12:3; 26:23
- Guide 1:6
- Hole boring jig 22:3
- Mortises 18:23
- Mortising bits 26:20-21; 48:24
- *Pressmate* table elevator 16:20
- Router chuck 12:3
- Table support 19:3

Drilling
- Angle 4:10; 35:22
- Circles 33:18-19
- Counterboring centerless holes 52:22
- Dowels 33:3; 34:3

Drop-leaf
- Hinge 11:10; 14:8
- Joint 11:10; 14:7-8

Drum sander 35:22; 38:3, 6; 41:16-17
Dust masks 40:23
Eclipse honing guide 47:14-15, 24
Edge gluing 32:13-15; 35:23; 50:20-21
Edging strips 50:17
Ellipse 5:8; 14:3; 16:3; 19:3; 24:3
End boards 9:7; 20:24; 23:13
End grain
- Gluing 24:23; 37:23; 41:12
- Planing 46:18
- Sealing 9:3; 40:22

Featherboards 33:23; 40:3, 6
Feeler gauge
- Uses 50:3

Files 43:24
Filler
- Nail hole 15:3
- Paste wood 39:21-22, 24; 42:21

Filler, cont.
- Putties 38:21, 24
- Sawdust glue/finish 17:3; 38:21

Finger joint 17:14-15; 35:18-20; 42:10-20
Finishes/finishing techniques
- Aerosols 46:21; 48:23
- Alcohol 53:20-21
- Alkyd resin varnish 43:20-21
- Books 38:24; 40:24
- Brushes 43:21; 46:22
- Brushing lacquer 46:20-21, 22; 48:22-23
- Chemical information 54:23, 24
- Cleaning brushes 39:3
- Danish oil 30:12-15; 44:23; 47:3
- *Deft Clear Wood Finish* 48:22-23, 24; 49:24
- Dyes 40:20-22, 24
- High gloss 42:23; 48:22-23
- Lacquer thinner 53:20-21
- Mineral spirits 53:20-21
- *Minwax Wood Finish* 40:19-22, 24; 48:24
- Naphtha 53:20-21
- Non-toxic 19:23; 25:23; 28:24; 32:12, 24; 36:23
- Oil 30:12-15, 24; 31:23, 24; 32:7-9, 24; 36:23; 39:24; 44:23; 47:3
- Open-grained woods 46:21
- Outdoor 27:14-15; 39:24; 45:15, 24
- Paste wax 42:23
- Paste wood filler 29:21-22, 24; 42:21; 43:22-23; 46:21, 22
- Pigments, Japan colors/artists oils 39:22-24; 40:23
- Polyurethane 43:20-21
- Rubbing 14:9; 42:21-23, 24; 43:22-23; 46:22; 48:23
- Satin 14:9; 42:23
- Sealer 39:22, 24; 40:22; 43:22-23; 46:22
- Shellac 46:22
- Solvents 53:20-21
- Spar varnish 39:24; 43:20-21; 45:15
- Spraying 46:21, 24; 47:3
- Stains 40:19-22, 23, 24; 46:21; 48:23
- *Sutherland Wells* finishes 30:14-15, 24; 32:7-9, 24; 36:23; 39:24; 45:15
- Turning 25:23
- Turpentine 53:20-21
- Varnish 43:3, 20-23
- Wash coat 39:22; 43:22-23

Flock
- *Suede-Tex* 46:23, 24

Fluting 49:5
Forest Products Laboratory 36:24
Formica plastic laminate 31:8-9; 33:3; 37:6, 24; 39:14; 41:10, 24
Forstner bits 40:4-5, 24
Frame
- Gluing 26:11; 30:9
- Mitered 33:18-19
- Molded edge 24:8-17, 20-22; 29:20-21; 30:4-8
- Mortise and tenon 26:7-11
- Octagonal 12:8-9; 21:4-7
- Rabbet routing 26:22
- Web construction 8:8-11; 14:10-11; 22:18-22; 24:14-17; 25:14-17; 26:12-17; 29:4-21; 31:4-9; 34:4-9, 16-19

Frame and panel
Arched-top 48:4-21
Construction 8:6, 8-11; 16:12-15; 18:4-19; 24:14-17, 20-22; 29:4-22; 34:10-12; 36:4-10; 39:8-9; 41:7; 48:4-21; 49:12-15; 53:4-5
Full through dado 40:12
Gelled stain 40:21-22, 24
General honing guide 47:14-15, 24
Glass
Cutting 13:16; 17:20; 52:7
Door 13:8-9; 22:18-22; 24:9; 25:19; 26:15-17; 29:19-20; 33:15, 24; 36:14, 16-19; 38:11; 49:6, 9
Fastening 46:3
Mounting 11:3
Rabbets 49:6
Sanding 13:3
Stop 49:9; 50:3
Glue/gluing
Hot-melt 34:24; 43:3
Outdoor 45:14-15
Stains 33:23
Tambours 17:4-5
Techniques 7:3; 50:20-21; 52:19
Veneer 44:15
Grinder tool rest 20:7; 24:3
Grinding wheels 20:4-6, 12; 23:23
Guide bushing
Router 37:11; 42:4-5, 24
Half-blind dovetail 22:4-9; 34:4-9
Half-lap 1:4, 7, 8; 2:11; 15:8-11; 16:6-7; 22:18-22; 27:4-13, 22; 29:23; 39:4; 45:6-7
Hand screws 15:7; 28:3
Hand-cut dovetails 22:4-5; 23:3
Hand-rubbed finish 14:9; 42:21-23, 24
Handles 42:12
Hexagon 12:10-11, 14, 16:8-9; 18:3; 40:10-11, 8
Hinges
Butler's tray table 14:16; 16:2; 20:23
Continuous 54:9, 18, 24
Drop-leaf 11:10; 14:8
Glass door 25:19; 33:15, 24; 38:10, 24
Knife 13:8-9
Locating on cabinet 37:3; 42:8-9
Mortises 32:23; 42:6-7, 12; 44:8, 18
Mounting 46:9; 49:7
Roto-Hinges 37:4, 24
Strap 45:9
Wooden 9:1-24
Hock plane blades 47:13, 24
Honing guides 47:14-15, 24
Horizontal boring jig 12:13
Hot-melt glue sheets 34:24
Icebox hardware 36:24
Inlay 20:17; 26:6, 22; 28:8-15, 24; 44:14, 23; 46:8, 24
Japan colors 39:22, 24; 40:23
Japanese water stones 24:4-6; 26:23; 31:23
Jig
Adjustable tenon/key 44:9, 10-11
Angle drilling 4:10; 35:22; 37:3
Bead cutting 16:3
Blade alignment 51:21, 22
Box joint 2:4; 17:12-13; 35:12-20; 42:16-17, 20
Burnishing a scraper 39:12-13
Circle cutting 51:10-11, 19; 52:17
Circular saw cut-off 50:23
Cleaning up box joints 42:20

Jig, cont.
Cove cutting 12:16; 36:11
Cut-off 15:15-16; 28:3
Cutting plastic laminate 33:3
Dentil molding 26:22; 29:3
Depth gauge 31:3
Dovetail 22:6-10; 32:22, 24
Dowel making 19:3; 39:16-17; 42:3
Doweling 41:4, 24
Drawer squaring 53:23
Drilling 22:3; 25:3; 33:3
Featherboards 33:23; 40:3, 6
Finger joint 17:14-15; 35:18-20; 42:16-17, 20
Frame chamfering 49:23
Grooving with router 52:13-15
Horizontal boring 12:13
Kerfing dowels 39:15
Leigh dovetail router jig 32:22, 24
Louvered doors 37:10-12
Miter 12:15; 24:12-13; 36:22; 38:3
Mitering small stock 40:3
Mortise cutting 16:18; 26:9
Octagonal frame cutting 21:17
Open-spline miter 36:22; 39:15, 19
Panel cutting 8:12; 18:23; 22:11; 25:13
Pin-routing 28:20-22
Plastic laminate 33:3
Push jig for small strips 39:23; 40:17; 41:10-11
Radial-arm router 20:3
Radial-arm saw cut-off 22:3
Raised panel 18:10-11; 20:3
Raised-panel 53:10-11
Resawing 6:9; 35:21
Ripping 25:13
Router turning 52:8-9
Router-cut mortise 26:3
Routing circles/rounds 25:3; 30:10-11; 40:11, 8-9; 41:16
Sharpening Forstner bits 40:4-5, 24
Stopped router cuts 39:3
Strip cutting 52:3
Tambour gluing 17:4-5; 25:18
Taper 1:6; 5:4; 11:3; 45:17
Tenon 16:18; 24:18-19; 28:3; 44:9; 46:3
Wedged dowels 39:14, 18, 23
Joinery
Angled half-lap 39:4
Angled mortise and tenon 48:2, 8-9, 16-20
Bare-faced dado 40:12
Box 2:4-5; 17:12-13, 19; 35:12-20; 42:10-20, 6; 44:3
Box rabbeted 17:19
Corner, plywood 22:3; 33:20-22
Dovetail 19:6-11; 22:4-9; 23:3; 32:23
Dovetail key 31:4-11
Dovetail tongue and groove 9:7; 20:22; 31:20-22; 38:16; 40:18
Drop-leaf 11:10; 14:7-8
Finger 17:14-15; 35:18-20
Frame and panel 8:6, 8-11; 18:10-11; 24:14-17; 29:22; 34:10-12; 36:4-10; 39:4-10; 41:7
Full through dado 40:12
Half-blind dovetail 22:4-9; 34:4-9
Half-lap 27:22; 29:23; 39:4; 45:6-7
Half-lap, mitered 2:11
Hand-cut dovetail 19:4-11; 22:4-5
Haunched mortise and tenon 18:8-9

Joinery, cont.
Keyed mortise and tenon 54:13-15
Locked miter 9:10
Machine-cut dovetail 22:6-9
Miter and dovetail key 44:4-8, 10-11, 17; 47:3
Miter and spline 7:11; 21:8-9; 30:9, 22; 36:22; 37:23; 46:7
Mitered half-lap 2:11
Mitered mortise and tenon 16:16-17
Molded mortise and tenon 24:12-13, 24
Mortise and tenon 8:3-5; 13:10-11; 15:12; 16:16-17; 18:8-11, 24; 22:18-22; 24:12-13, 18-19; 25:22; 26:7-11; 37:13; 38:12- 13; 39:8-9; 43:5, 10, 14; 48:8-10; 50:12-13; 54:13-15
Mortise and tenon, wedged 48:12-13; 54:13-15
Open mortise and tenon 24:18-22
Open-spine miter 36:22; 39:15, 19
Parallel spline 9:9
Rabbet and groove (or rabbet/dado) 6:8; 10:9; 18:20-21
Routed dovetail 22:6-9
Rule 11:10; 14:7-8
Sliding dovetail tongue and groove 20:20-21; 31:4-11
Spline and groove 40:17
Stave construction 25:8-9; 27:3; 30:23
Stopped dado 36:12
Stub tenon and groove 29:22; 31:4-9; 41:7; 48:4-7
Through dovetail 19:6-11
Through mortise 38:12-13
Tongue and dado 40:12-15; 41:6; 42:10-11, 13
Tongue and groove 29:22; 33:20-22; 38:8-9; 49:12
Tusk tenon 54:13-15
Twin tenon 12:12
Wedged dowel 39:15, 20
Wedged mortise and tenon 15:8-12
Jointer
Router table 45:3
Keyhole
Drilling 46:13
Knock-down hardware 37:17, 24; 38:18, 24; 41:4-6, 24; 54:7, 24
Lacquer 41:4-6, 24; 46:20-21, 22, 24
Lacquer thinner 53:20-21, 20-21
Latex stain 40:20-21
Lee Valley honing guide 47:14-15, 24
Legs
Cabriole 43:4-9
Tapered 11:11; 14:5
Turned 12:5
Leigh dovetail router jig 32:22, 24
Lining
Felt 44:14; 51:13
Suede-Tex Flock 46:23, 24
Velvet 46:11, 23
Linseed oil finish 30:12-15
Lock
Mounting 46:12-13
Louvered doors 37:10-13
Marking gauge 44:3
Marquetry inlay 20:17; 26:6, 22; 28:8-15, 24; 46:8
Methylene chloride 53:20-21
Mill marks 38:21-22
Mineral spirits 53:20-21
Miter
Compound 36:21
Cutting 12:14; 21:8-9; 25:23; 30:9; 38:3

Miter, cont.
Gauge, table saw 29:23; 52:23
Gluing 21:9; 30:9
Jig 12:15; 24:12-13; 38:3
Locked 9:10
Mathematics 12:14-15
Small stock 39:3
Twenty-two degrees 41:3, 10-11
Miter and dovetail key joint 44:4-8, 10-11, 17; 47:3
Miter and spline 49:16
Miter and spline joinery 7:11; 21:8-9; 30:9; 36:22; 46:7
Miter gauge 29:23; 52:23
Mitered half-lap 2:11
Mitered mortise and tenon 16:16-17
Molded mortise and tenon 24:12-13
Moldings 26:22; 36:11; 37:7, 24; 40:16
Mortise
Cutting jig 16:18; 18:23; 26:9
Drill press 18:23; 26:20-21, 24; 48:24
Hinge 32:23; 37:17; 42:5-7, 12; 44:18
Lock 44:19; 46:12-13
Mitered 16:16-18
Plugs 38:15
Router-cut, jig 26:3
Slot 8:4; 10:3; 13:10-11; 26:8-9
Through 15:12
Twin 12:12
Mortise and tenon 54:5, 13-15
Angled 48:2, 8-9, 16-20
Conventional 43:5, 10, 14
Frame and panel 18:10-11; 26 7-11; 37:13; 39:8-9; 48:8-9, 16-20
Haunched 8:3-5; 13:10-11; 18:8-9
Keyed 48:12-13; 54:13-15
Mitered 16:16-18
Molded edge 24:12-13
Open 24:18-19
Through 38:12-13
Twin tenon 12:12
Wedged 15:12; 48:12-13
Mortise bits 26:20-21; 48:24
Muntins 13:8-9
Nailing
Blind nailer 53:23
Nailing fixture 15:3
Naphtha 53:20-21
Non-grain raising (NGR) stain 40:22, 24
Octagon 12:8-9; 16:10; 21:4-7
Frame jig 21:17
Oil, paraffin (rubbing) 42:22-23, 24
Oil finishes 30:12-15; 32:7-9; 36:23
Oil soluble dyes 40:21-22, 24
Oil stains 40:20-22, 23, 24
Open-grained wood
Filling 39:21-22
Open-spline miter 36:22; 39:15, 19
Outdoor
Finishes 27:14-15; 45:15, 24
Glues 45:14-15, 24
Screws 45:23, 24
Woods 45:13, 24
Outfeed table
Table saw 47:10-11
Palm sanders 14:12; 33:7
Panel cutting 8:12; 18:23; 22:11; 25:13
Panel raising bit 40:18, 24
Parallel spline 9:9
Paste wax 42:23
Paste wood filler 39:21-22, 24; 42:21; 43:22-23; 46:21-22
Patternmakers rasp 43:8, 24
Patterns
Butler's tray table 14:3

Patterns, cont.
Cabriole legs 43:24
Carving (quilt rack) 32:24
Cradle 48:24
Corner cabinet decorative profile 51:24
Pembroke table 14:3
Roadster (car) 51:24
Routed box 13:13
Scandinavian cabinet 53: 24
Toy biplane 35:24
Photocopy patterns 45:3; 47:3
Picture and glass mounting 11:3
Picture frame router bit 10:3; 36:24
Picture frames
Dustproofing 54:3
Finishing 50:3
Pigments 39:22, 24; 40:20-22, 23, 24
Pin routing 28:10-11, 16-18, 20-22
Pipe clamps 15:3, 7; 28:3; 36:3
Plane
Adjustments 23:16-22; 25:23
Bench 15:7; 23:16-22
Blades, *Hock* 47:13, 24
Blades, replacing 47:13
Blades, sharpening 46:12-17
Block 46:14-15, 24; 48:3
Block, tuning 46:16-17
Edge trimming 48:3
Flattening 23:22; 25:3; 29:23
Jack 15:7; 23:16-17
Sharpening 23:18-19; 47:14-15
Storage "shoe" 49:3
Wooden 47:18-21, 22
Planer, *Wagner Safe-T-* 10:10; 15:7
Planing
End grain 46:18
Table top 23:21
Thin stock 38:3; 44:23
Plastic T-molding 37:7, 24
Plastic laminate 31:8-9; 33:3; 37:6, 24; 39:14; 41:10, 24
Plugs
Cutters 37:24
Cutting flush 47:23
Plunge routers 28:23
Plywood
Buying tips 30:23
Corner joint 9:10; 22:3; 33:20-22
Cutting 34:24
Drawer construction 22:14-15
Splintering 22:11
Polyurethane
Varnish 43:20-23
Portalign
Drill guide 12:3, 13; 38:3; 48:6
Portalign, drill guide 50:11
Pulleys 52:23
Pumice 14:9; 42:23, 24; 46:22
Push jig for small strips 39:23; 40:17; 41:10-11
Quarter-round stops 36:20
Rabbet
Smooth 49:22-23
Rabbet and groove joint 6:8; 10:9; 18:20-21
Rabbet router bit 36:21; 38:23
Rabbeted
Dovetails 21:3
Drawer front 18:20-21; 22:6-9
Frame, glass 49:6
Frame, routed 26:22; 30:9
Radial arm saw
Alignment 51:22
Cut-off jig 22:3
Router jig 20:3
Stand 32:3
Table insert 20:3
Techniques 15:16; 16:16-18; 18:11, 23; 31:3; 38:3; 40:13

Raised-panel 2:10; 8:7; 18:10-11, 23; 20:3; 23:23; 48:4-21; 53:10-11
Rasp 26:23; 43:8, 24
Repairs
Gouges and scratches 38:21
Resawing 6:9; 28:4-7; 35:21; 40:6
Band saw 51:18
Rip/bevel 16:8
Ripping jig 25:13
Rosan inserts 22:11; 24:3; 27:24; 28:24; 30:3; 38:14-15, 17, 24; 39:3; 42:15, 24
Rottenstone 42:23, 24; 46:22
Routed
Box sides 13:12-13; 28:10-11
Dovetails 22:6-9; 32:22
Router
Auxiliary base 35:3
Bit, gluing dovetail 31:24
Bit, mortising 26:20-21
Bit, picture frame 9:3; 10:3; 36:24
Bit, point-cutting ogee 44:7
Bit, rabbet 36:21; 38:23
Bit, raised panel 23:23; 53:11
Bit, slot cutter 48:19, 24
Bits 37:19-21, 24; 46:4-5
Buyer's guide 31:16-19
Chuck with drill press 12:3
Cleaning inside corners 48:15
Collets 46:4-5
Debris 24:23; 34:3
Depth adjustment tool 52:3
Direction 36:20-21
Dovetail bit 44:24
Dovetail fixtures 22:6-9; 23:3; 32:22, 24
Dovetail slots and keys 44:5
Guide bushing 37:11; 42:4-5, 24
Guide, edge profile 49:8
Guide, multi-purpose 17:20
Jig 52:12-13
Jig, *Leigh* dovetail 32:22, 24
Jig, centered grooves 30:22
Jig, dentil molding 29:3
Jig, frame chamfering 49:23
Jig, lap dovetail 22:6-9
Jig, louvered door 37:10-13
Jig, mortise cutting 26:3
Jig, round blanks 25:3
Jig, turning 52:8-9
Jig, wheel making 45:12
Pin 28:20-22
Plunge 28:23
Stopped dado 40:12-13, 14
Techniques 20:13; 21:8-11; 25:13; 26:22; 28:10-11, 16-18, 20-22; 30:4-11; 36:21; 37:22; 38:15; 40:8-9, 11, 12-13, 14; 41:16; 42:4-5; 45:12; 46:23; 47:23; 50:6; 52:13
Trammel attachment 21:10; 30:9; 40:8-9, 11; 41:16
Universal base plate 42:24
Router table
Adjustable holding jig 44:9
Auxiliary fence 49:7
Bit pocket 46:3
Box joint jig 42:17, 18
Cleaning up notches 40:3
Construction 20:18-19; 22:16-17; 31:3
Fluting columns 49:5
Guard, removable 54:3
Inserts 30:3
Jig for dowel making 19:3; 39:16-17; 42:3
Jig for jointing 45:3; 49:22
Jig for stopped cuts 39:3
Jointer 45:3; 49:22
Micro adjuster 49:3
Minute adjustments 42:3; 44:3
Mount on wheels 37:3
Pin-routing attachment 28:20-22
Router table, cont.
Preventing fallout 51:3
Raised panel jig 53:10-11
Routing circles/rings 25:3; 40:9
Saber saw setup 30:3
Sanding drum attachment 38:3
Set-up for lattice pattern 41:14-15, 17
Shims for adjustment 42:3
Table saw extension 24:3
Vacuum attachment 36:3
Wing nuts 43:3; 52:3
Rubbing compound 42:23, 24
Rubbing finishes 14:9; 42:21-23, 24; 48:23
Rubbing oil 14:9; 42:21-23, 24
Rule joint 11:10; 14:7-8
Safe-T-Planer, Wagner 10:10; 15:7
Safety 15:3; 31:23; 34:3, 23; 36:23; 38:23; 40:23; 54:3
Sander
Belt 15:7; 33:3; 35:22; 50:22
Drum 35:22; 38:3, 6; 41:16-17
Palm 33:7; 34:3, 22
Rockwell Speed Bloc 14:12; 33:7
Stand, belt 10:10
Toy wheel jig 41:3
Sanding
Block 39:3; 42:21
Circles 11:12
Disk 13:3; 15:3; 31:3
Dowels 9:12
Drum 13:3; 15:3; 25:3; 32:3; 38:3, 6; 41:16-17
Dust masks 40:23
Glass 13:3
Safety 38:23
Scroll cuts 52:3
Surface preparation 38:22; 40:22; 43:22-23
Table top 15:7; 50:22
Wet 42:22-23
Sanding sealers 39:22, 24
Sandpaper 33:4-6; 34:3; 38:22
Silicon carbide 33:4-6; 42:22-23, 24; 45:4-5; 46:17, 22
Zinc stearate 42:21-22, 24
Saw
Dovetail 19:5
Saw blade
Band 10:3
Cleaning 17:3; 21:23
Dado blade 17:20; 34:22; 44:20-22, 24
Storage 50:3
Table, carbide-tipped 27:16-21, 24; 28:19, 23; 53:18-19
Thin kerf 53:18-19
Sawdust catcher 47:8-9
Scraper
Cabinet (hand) 14:12-13; 15:7; 39:11-13, 24
Scraper handle 45:3
Screws
Brass 18:3; 41:24; 49:11
Outdoor 45:23, 24
Sheet rock 18:3; 19:23
Sealers 14:9; 39:22, 24; 40:22
Shaper
Bit 12:3, 10-11
Guides 19:23
Sharpening
Aids 20:7; 31:3; 33:3; 39:3, 24; 40:4-5, 24; 47:16-17
Angle 46:18-19
Bevel 47:16-17
Bevel honing guides 47:14-15
Brad point bits 45:4-5
Burnisher 39:11-13, 24
Carbide-tipped table saw blades 28:19
Chisels 20:8-11; 26:23; 47:14-15
Diamond stones 24:7
Forstner bits 40:4-5, 24
Sharpening, cont.
Japanese steel plate 47:12-13, 24
Japanese water stones 24:4-6; 26:23; 31:23
Jig 47:16-17
Microbevel 47:16-17
Plane irons 23:18-19; 47:12-17
Router bits 37:21
Scraper blade 14:13; 39:12-13
Spade bits 52:20-21
Stones 20:4-7, 12-13; 21:23; 24:4-6, 7; 26:23; 31:23; 39:11-13, 24; 40:4-5, 24; 47:12-13, 16-17
Table saw blades 28:19
Shelf
Aligning brackets 11:3
Hardware 49:18-19, 24
Material 49:20-21
Pin supports 49:18
Reinforcing 49:17, 21
Sagging 49:21
Spans 49:21
Wire supports 49:19, 24
Shooting board 13:3
Sliding dovetail tongue and groove 20:20-21; 31:4-11
Slot cutter bit 48:19, 24; 50:6, 17
Solvents 53:20-21, 23; 54:23
Spalted wood 28:23
Spar varnish 39:24; 43:20-21
Spindle turning 26:3
Spline
Cutting 10:3; 15:4-5; 21:8-9; 30:9; 40:17; 46:7
Parallel 9:9
Routed groove 21:8-9
Use 23:22; 32:14-15
Spline and groove joint 40:17
Splines
Cutting kerf 51:3
Gluing alignment 52:19
Uses 50:21
Spokeshave 43:7-8
Spray Mount 35:22-23
Stains 40:19-22, 24; 48:23
Stanley honing guide 47:14-15, 24
Starrett rules 34:23
Stave construction 25:8-9, 24; 27:3; 30:23
Steel wool 42:22-23, 24, 3; 43:22-23; 46:22; 48:23
Sticker stains 34:22
Stones
Diamond 24:7
Japanese water 24:4-6; 26:23; 31:23; 47:12-13
Sharpening 20:4-7, 12-13; 21:23; 39:11-13, 24; 40:4-5, 24
Stopped dado 38:3; 40:12, 15; 42:13
Stopped molding cuts 36:20-21
Stopped rabbets 36:21
Straightening crooked edges 53:3
Stripper 53:20-21
Strips
Cutting thin 52:3
Suede-Tex flock 46:23, 24
Surface preparation for finishing 38:20-22, 24; 40:22; 42:21
Sutherland Welles finishes 30:14-15, 24; 32:7-9, 24; 36:23; 39:24; 45:15
Table saw
Adjustable holding jig 44:9
Adjustments 47:23
Alignment 51:20-21
Bevels 23:3
Blades, carbide-tipped 27:16-21, 24; 28:19, 23
Blades, thin kerf 53:18-19, 24
Cabinet 47:4-9
Table saw, cont.
Compound miters 36:21
Cove cutting jig 36:11; 37:23
Cove cutting template 46:6-7
Curved chamfer jig 48:20-21
Cutting plastic laminate 33:3
Cutting small strips 39:23; 40:17; 41:10-11
Dado blades 17:20; 34:22; 44:20-22, 24
Insert 35:23; 48:15
Miter and dovetail key joint 44:10-11
Miter gauge 25:3
Outfeed table 47:10-11
Setup 20:3; 42:3
Shelf 45:3
Stop block 48:3
Table top 43:18
Tack rags 38:21-22
Tambour techniques 4:6-8; 17:4-11; 20:3; 25:14-19
Taper
Bevel 16:10-11
Cutting 32:10-12
Jig 1:6; 5:4; 11:3
Tapered legs 11:11, 14:4-8; 28:12-13
Template
Back panel profile 40:17
Cardboard 39:4-5
Drilling 39:20
Masonite 38:4-5
Plexiglas 49:3
Router, guide bushing 42:4-5
Router, louvered doors 37:10-12
Socket 54:3
Tenon
Cutting 18:10-11; 26:10-11; 46:3
Haunched 18:8-9
Jig 24:18-19
Mitered shoulder 16:16-17
On dowels 48:15
Repairing round 23:3
Staggered-shoulder 13:10-11
Stub 29:22; 31:4-9; 33:20
Twin 12:12
Threaded inserts 22:11; 24:3; 27:24; 28:24; 30:3; 38:14-15, 17, 24; 39:3; 42:15, 24; 47:19
Tongue and dado joint 40:12-15; 41:6; 42:10-11, 13
Tongue and groove joint 9:7; 29:22; 31:12-15, 20-22; 33:20-22; 38:8-9; 49:12
Tool
Holder 50:9
Tray 50:9
Tool rest
Grinder 20:7; 24:3
Tung oil finish 30:12-15; 32:7-9, 24; 36:23
Turning
Bowl 21:18-21; 25:24
Dowels on router table 19:3; 39:16-17
Finding centers 43:3
Gouges 21:22; 24:23
Legs 12:5
Router jig 52:6-7, 8-9, 10-11
Scraper 21:22; 22:23
Spindle 26:3
Tools 21:18-22; 22:23; 24:23
Turpentine 53:20-21
Tusk tenon joint 54:13-15
Universal base plate (router) 42:24
Upholstery 43:13
Varnish 43:20-21
Applying 43:22-23
Spar 39:24
Tung oil 30:14; 39:24
Veneer 14:10-11; 33:18-19; 34:24; 40:6-7, 24; 44:15, 24
Bending 51:11, 5
Finishing 44:23
Flattening 44:15
Veneer, cont.
Gluing 44:15
Making 51:11
Panels 44:16
Sources 44:24
Tape 17:8; 22:11-14
Vise
Bench 50:10-11
Bench edge clamps 50:24; 54:3
Dog block assembly 50:4-9
Dogs 28:3; 50:15
Front 50:10-11
Holding jig 29:3
Machinist's 51:3
Parts 50:10-11, 24
Preventing rack 50:23
Screw 50:8, 24
Wagner Safe-T-Planer 10:10; 15:7
Wall mounting system 4:12; 37:15, 17, 24; 40:18; 42:11, 9; 53:17
Warp
Preventing 49:22
Warping (cupping) cabinet top 38:23
Wash coat 39:22
Water soluble dye 40:21-22, 24
Water stones
Japanese 24:4-6; 25:23; 31:23; 47:12-13, 24
Web frame construction 8:8-11; 22:18; 29:4-21; 31:4-9
Wedge clamps 5:3
Wedged dowel joint 39:15-20
Wheels
Chaise longue 44:12
Toy 35:24; 41:3, 24
Wing nuts
Homemade 43:3
Wood
Decay 45:13
Dimensions 22:23; 37:22
Information 36:24
Movement 9:7; 31:23; 38:8, 23; 39:15; 40:23
Outdoor use 3:11; 27:14-15
Outdoor, pressure-treated 45:13
Putty 38:21, 24
Sample kits 34:23; 37:22
Spalted 28:23
Storage 19:23; 30:3
Wood putty 51:3
Woodburning pen 47:3, 24
Wooden hinges 9:5-11
Woodworking clubs
Lists 27:24; 28:24; 29:24; 30:24; 31:24; 32:24; 33:24; 35:24; 36:24; 37:24; 38:24; 40:24
Organizational help 37:24

PROJECT INDEX

Antique wall mirror 26:18-19, 24
Art center, child's 41:4-9, 24
Baby cradle 48:8-14, 24
Bachelor's chest 34:4-9
Barrister's bookcase 29:16-21, 24
Bathroom cabinet 37:14-15, 24
Bed
Bunk 38:24
Cradle 48:8-14, 24
Headboard 34:10-12
Single 38:12-17, 24
Bed, bunk 38:12-19, 24; 53:24
Bed-side stand 18:4-7; 34:16
Bedroom furniture 34:4-21; 38:12-19; 48:8-14, 24; 53:4-9
Belt buckle 10:6
Bench
Classic workbench 50:4-14, 23, 24
Country (keyed mortise & tenon) 54:10-13

Bench, cont.
Garden 3:8-9; 27:12-13; 45:16-22
Trestle 23:24
Binder
Wooden looseleaf 7:4
Blanket chest 16:12-15; 32:16-21, 24; 36:23; 38:23
Bookcase 7:6-7; 29:16-21, 24; 49:12-17
Bookend, brass base 49:10-11
Bookrack 7:12
Bow saw 5:5
Bowl, turned
Laminated 21:18-21
Stave construction 25:24
Box
Band saw 51:10-13
Bread 4:6-8
Briefcase 44:16-19, 24
Decorative 9:11; 44:12-14, 24
End grain top 15:13
Hexagonal 44:12-14, 24
In/out 31:10-11
Jewelry 9:5; 24:20-22; 46:6-11, 24
Landscape lid 51:14-15
Music 6:6-7; 28:4-7, 24
Recipe 10:8; 44:4-8, 24
Roll-top bread 4:6-8
Routed 13:12-13; 28:10-11
Shop storage 15:14-15
Small 44:12-14, 24; 51:10-15
Tissue 2:5; 19:24
Toy 29:4-9, 24
Bread board 20:24
Bread box
Roll-top 4:6-8
Briefcase 44:16-19, 24
Buckle
Belt 10:6
Buffet table
Gate-leg 20:14-17
Bunk bed 38:18-19, 24
Bunk beds 53:24
Butler's tray table 14:10-11, 16; 16:3
Cabinet
Barrister's bookcase 29:16-21, 24
Bathroom 37:14-15, 24
Bed-side stand 18:4-7
Book/magazine 7:6-7
Bookcase 49:12-17
Caddy, two-drawer 31:12-15
Caned-panel cabinet hutch 22:18-22
Chair-side 24:14-17
Classic workbench 50:16-19
Colonial dry sink 18:12-15
Colonial wall hutch 18:16-19
Contemporary hutch 13:4-7
Curio 21:12-15; 26:12-17, 24
Drill press 54:16-19
European cabinet and hutch 22:18-22
File 7:8-9; 29:10-15
Frame and panel 8:8-11
Icebox 36:4-10
Modular storage system 22:12-15
Modular wall unit 33:8-17
Night stand 34:16-19
Raised-panel door 8:7
Scandinavian corner 53:12-17
Shop storage 25:4-7; 42:10-15, 18-19, 24
Spool 26:4-6
TV/VCR 25:14-19; 38:8-11, 24
Table saw 47:4-9
Tambour TV 25:14-19
Tambour stereo 17:6-9
Tambour wall 17:10-11
Tool 42:10-15, 18-19, 24
Wall cupboard 40:14-18, 24
Work bench 50:16-19
Cabriole leg
Footstool 43:10-13, 24
Cabriole leg, cont.
Queen Anne table 43:14-18, 24
Camp stool 3:7
Candle stand table 11:6-7
Caned-panel cabinet and hutch 22:18-22
Canister
Turned 14:14-15; 20:23; 25:8-12; 27:3
Car
Classic roadster 51:4-9
Toy race 5:12
Card holder 35:18-20, 24
Cart
Microwave 54:4-9
Microwave/serving 23:8-11
Chair
Chaise 45:6-11, 24
Contemporary 2:6-8
Deck 3:6-7
Oak 15:8-11
Patio 27:8-11
Seat 25:23
Chair-side cabinet 24:14-17
Chaise longue 45:6-11, 24
Cheese board 52:12-15, 24
Chest
Bachelor's 34:4-9
Blanket 16:12-15; 32:16-21, 24; 36:23; 38:23
Seven-drawer lingerie 53:4-9
Six-drawer (box joint) 17:16-19
Sweater 9:8-9
Toy 29:4-9, 24
Cheval mirror 30:4-8, 24
China
Wall hutch 18:16-19
Wall shelf 40:14-18, 24
Chisel case 24:20-22
Christmas ornaments 6:10-12
Circular mirror frame 12:10-11
Circular table 30:16-21, 24
Clock
Crystal table 49:4-9
Desk 10:4; 33:18-19, 24; 41:10-13, 24
Mantel 24:8-11; 30:23
Octagonal wall 12:8-9
Regulator 36:12-15, 24
Round wall 30:10-11
Schoolhouse 21:4-7; 30:23
Coffee grinder 35:15-17, 24
Coffee table 19:14-17; 25:20-22
Coin sorter
Columns 16:9
Tray 10:6
Colonial
Dry sink 18:12-15
Wall hutch 18:16-19
Cookbook/recipe shelf 6:4-5
Cooling rack 1:2
Cradle
Baby 48:8-14, 24
Doll 38:4-7, 24
Cupboard
Wall 40:14-18, 24
Curio cabinet 21:12-15; 26:12-17, 24
Cutting board 1:1; 20:24; 32:10-12, 24; 52:12-15
Deck
Chair 3:6-7
Squares 3:10
Decorative boxes 44:12-14, 24
Desk
Adjustable 31:4-9
Child's drop-front 41:4-9, 24
Lap 9:6
Shaker-style writing 12:4-7
Dining table
Circular with leaf 30:16-21, 24
Contemporary oak 15:4-5
Drop-leaf 11:8-10
Picnic 27:4-7
Trestle 1:3-5; 23:12-15
Display case 9:11; 26:4-6, 12-17, 24
Doll cradle 38:4-7, 24
Dresser 17:16-19; 34:4-9; 53:4-9, 24
Drill bit holders
Forstner bit box 54:22
Spade bit rack 54:22
Drill press
Cabinet 54:16-19
Drop leaf
Pembroke table 14:4-8
Table 11:8-10
Easel/desk
Child's 41:4-9, 24
End table 43:14-18, 24
File cabinet 7:8-9; 29:10-15
File caddy
Two-drawer 31:12-15
Footstool
Cabriole leg 43:10-13, 24
Frame
Circular 12:10-11; 30:10-11
Oval 5:9
Gallery clock 30:10-11
Garden bench 45:16-22, 24
Gate-leg buffet table 20:14-17
Glass-top table 40:10-11
Glider, yard 39:8-10, 24
Goblets
Turned 23:4-7; 24:23
Hall mirror 21:16
Hardware kits
Classic roadster 51:24
Drill press cabinet 54:24
Kaleidoscope 52:24
Lingerie dresser 53:24
Microwave cart 54:24
Headboard 34:10-12
Hutch
Caned-panel cabinet and hutch 22:18-22
Contemporary 13:4-7
Icebox 36:4-10
In/out box 31:10-11
Jewelry case 9:5; 24:20-22; 46:6-11, 24
Kaleidoscope 52:4-7, 24; 53:24
Knife holder 10:7
Knife rack 52:16-19, 24
Lamp
Dovetail 22:24
Hanging 2:9
Lantern
English wall 36:16-19, 24
Lazy Susan 21:10-11
Letter opener 10:7
Light bracket
Swivel 9:4
Lounge
Chaise 45:6-11
Magazine rack 48:4-7, 24
Mantel clock 24:8-11; 30:23
Marking gauge 19:12-13; 21:3
Memo board 18:24; 41:9, 24
Microwave cart 54:4-9, 24
Microwave/serving cart 23:8-11
Mirror
Antique wall 26:18-19, 24
Cheval 30:4-8, 24
Circular frame 12:10-11
Hall 21:16
Vanity 10:5; 24:24
Wall 34:20-21
Modular storage system 22:12-15
Modular wall unit 33:8-17, 24
Music box 6:6-7; 28:4-7, 24
Nestled tables 28:12-15
Night stand 34:16-19
Note board 18:24; 41:9, 24
Ornaments
Christmas 6:10-12
Outdoor furniture 3:3-12; 27:4-13; 39:4-10, 24; 45:6-11, 16-22, 24
Outfeed table
Table saw 47:10-11
Patio chair 27:8-11
Pembroke table 14:4-8
Pencil and card holder 2:12
Phone
Old-fashioned wall 42:4-9, 24; 53:24
Picnic table 27:4-7
Pin-up board 18:24; 41:9, 24
Plane
Wooden 47:18-21, 24
Planter
Cedar pillars 3:4
Hanging 3:12
Redwood tub 3:3
Stand 40:10-11, 24
Tapered-sides 16:10-11
Popcorn bowl
Turned 25:24
Porch swing 39:4-7, 24
Queen Anne side table 43:14-18, 24
Quilt rack 32:4-6
Rack
Knife 52:16-18
Magazine 48:4-7, 24
Recipe box 10:8; 44:4-8, 24
Regulator clock 36:12-15
Roll-top bread box 4:6-8
Round trivet 41:14-16
Routed
Snack tray 28:16-18
Trivets 41:14-17
Router case 4:3
Router table 4:6-8; 20:18-19; 22:16-17
Router table stand 22:16-17
Router table turning jig 52:8-9
Salt and pepper shakers 52:10-11, 24
Schoolhouse clock 21:4-7; 30:23
Sconce
Candle 6:5
Scrap wood projects 3:12; 10:4-8; 14:14
Serving
Cart 23:8-11
Tray 19:19; 39:14-15
Shaker-style
Peg rack 2:3
Step stand 19:20-22
Table 11:4-9
Writing desk 12:4-7
Shakers, salt & pepper 52:10-11, 24
Shelf
Wall 20:20-21; 37:16-18, 24; 40:14-18, 24
Shop storage
Box 15:14-15
Cabinet 25:4-7; 42:10-15, 18-19, 24; 50:16-19
Cart 13:14-15
Side table
Queen Anne 43:14-18, 24
Shaker 11:4-5
Snack tray
Routed 28:16-18
Spice box 6:3
Spool display case 26:4-6
Spoon display case 9:11
Square trivet 41:17
Stand
Drill press 54:16-19
Magazine 48:4-7, 24
Planter 40:10-11, 24
TV trays 16:7; 37:8-9
TV/VCR 38:8-11, 24
Umbrella 40:6-9, 24
Stereo cabinet, tambour 17:6-9
Stool
Camp 3:7
Child's 35:12-13
Shop 4:11
Storage
Modular system 22:12-15
Modular wall unit 33:8-17
Shop 15:14-15; 25:4-7; 42:10-15, 18-19, 24
Sweater chest 9:8-9
Swing, porch 39:4-7, 24
TV cabinet 25:14-19; 38:8-11, 24
TV tray stand 16:7; 37:8-9
TV tray tables 16:4-7; 17:20; 37:4-7, 24
Table
Butler's tray 14:10-11, 16
Candle stand 11:6-7
Coffee 1:7; 19:14-17; 25:20-22
Contemporary oak 15:4-5
Dining 11:8; 15:4; 20:14; 23:12; 30:16-21, 24
Drop-leaf 11:8-10; 14:4-8
End 43:14-18, 24
Gate-leg buffet 20:14-17
Glass-top 40:10-11, 24
Kitchen 15:4-5
Leaf 30:18-19
Nestled 28:12-15
Outfeed, table saw 47:10-11
Pembroke 14:4-8
Picnic 27:4-7
Queen Anne side 43:14-18, 24
Shaker-style side 11:4-5
TV tray 16:4-7; 37:4-7, 24
Trestle 1:3-5; 23:12-15
Table saw
Cabinet 47:24
Outfeed table 47:10-11
Tambour
Cylinder 40:7, 10
Roll-top bread box 4:6-8
Stereo cabinet 17:6-9
TV cabinet 25:14-19
Wall cabinet 17:10-11
Tie rack 1:2
Tissue box 2:5; 19:24
Tool storage 4:12, 9; 42:10-15, 18-19, 24
Toy
Bank truck 41:18-23, 24
Biplane 35:8-11, 24
Chest 29:4-9, 24
Race car 5:12
Train 5:10-11
Truck 35:4-7, 24
Toy car 51:4-9
Tray
Routed snack 28:16-18
Serving 19:19; 39:14-15
Snack 28:16-18
TV, tables 16:4-7; 17:20; 37:4-7, 24
Tray carrier 39:18-20
Trestle
Bench 23:24
Desk 31:4-9
Table 1:3-5; 23:12-15
Trivet
Round 41:14-16
Square 41:17
Tiled 21:24; 22:23
Turning
Canister 14:14-15; 25:8-12; 30:23
Fruit bowl 21:18-21
Goblets 23:4-7; 24:23
Popcorn bowl 25:24
Umbrella stand 40:6-9, 24
VCR cabinet 25:14-19; 38:8-11, 24
Vanity mirror 24:24
Wall
Cabinet 17:10-11; 42:10-15, 18-19, 24
Cupboard 40:14-18, 24
Lantern, English 36:16-19, 24; 40:3
Mirror 21:16; 26:18-19, 24; 34:20-21
Shelf 20:20-21; 37:16-18, 24; 40:14-18, 24
Unit 33:8-17, 24
Wastebasket 7:5; 40:10-11, 24
Workbench 50:4-14
Workbench cabinet 50:16-19
Yard glider 39:8-10, 24